EVALUATION REPORT

FLORIDA BUILDING CODE, 9TH EDITION (2026)

Issued July 30, 2026

Manufacturer: AMRIZE BUILDING ENVELOPE LLC (ELEVATE)
26 Century Blvd
Nashville, TN 37214
(800) 428-4442
https://www.elevatecommercialbp.com

Manufacturing Plants: Tuscumbia, AL
Welford, SC

Quality Assurance: UL LLC (QUA9625)

SCOPE

Category: Roofing
Subcategory: Single Ply Roof System
Code Edition: Florida Building Code, 9th Edition (2026) including High-Velocity Hurricane Zones (HVHZ)
Code Sections: 1504.3.1, 1504.6, 1504.7, 1507.2.4, 1507.1, 1515.1.1 , 1515.1.4, 1515.2.4, 1523.1.1, 1523.6.2
Properties: Wind Resistance, Impact Resistance, Physical Properties

PRODUCT DESCRIPTION

Products	Specification	Description
Elevate UltraPly TPO (Tuscumbia, AL or Wellford, SC)	ASTM D 6878 TAS 110	45-mil, 60-mil, or 80-mil thick thermoplastic polyolefin, heat-weldable, single-ply roof membrane with polyester weft-inserted reinforcement
Elevate UltraPly TPO Flex Adhered (Tuscumbia, AL)	ASTM D 6878 TAS 110	60-mil thick thermoplastic polyolefin, heat-weldable, single-ply roof membrane with polyester weft-inserted reinforcement
Elevate UltraPly TPO Flex SA (Tuscumbia, AL)	ASTM D 6878 TAS 110	60-mil thick self-adhered thermoplastic polyolefin, heat-weldable, single-ply roof membrane with polyester weft-inserted reinforcement
Elevate UltraPly TPO SA (HVHZ ONLY; Tuscumbia, AL)	ASTM D 6878 TAS 110	60-mil thick self-adhered thermoplastic polyolefin, heat-weldable, single-ply roof membrane with polyester weft-inserted reinforcement
Elevate UltraPly TPO XR 100 (Tuscumbia, AL)	ASTM D 6878 TAS 110	45-mil thick thermoplastic polyolefin, heat-weldable, single-ply roof membrane with polyester weft-inserted reinforcement and 8 oz. non-woven polyester fleece backing
Elevate UltraPly TPO XR 115 (Tuscumbia, AL)	ASTM D 6878 TAS 110	60-mil thick thermoplastic polyolefin, heat-weldable, single-ply roof membrane with polyester weft-inserted reinforcement and 8 oz. non-woven polyester fleece backing
Elevate UltraPly TPO XR 135 (Tuscumbia, AL)	ASTM D 6878 TAS 110	80-mil thick thermoplastic polyolefin, heat-weldable, single ply roof membrane with polyester weft-inserted reinforcement and 8 oz. non-woven polyester fleece backing

This evaluation report is provided for State of Florida product approval under Rule 61G20-3. The manufacturer shall notify CREEK Technical Services, LLC of any product changes or quality assurance changes throughout the duration for which this report is valid. This evaluation report does not express nor imply warranty, installation, recommended use, or other product attributes that are not specifically addressed herein.

REFERENCES

Entity	Report No.	Standard (Year)
Atlantic & Caribbean Roof Consulting (TST4671)	ACRC 02-002	TAS 114(J) (2011[1])
Atlantic & Caribbean Roof Consulting (TST4671)	ACRC 05-002	TAS 114(J) (2011[1])
FM Approvals (TST1867)	3001925	FM 4470 (2022)
FM Approvals (TST1867)	3004249	FM 4470 (2022)
FM Approvals (TST1867)	3017120	FM 4470 (2022)
FM Approvals (TST1867)	3030650	FM 4470 (2022)
FM Approvals (TST1867)	3033218	FM 4470 (2022)
FM Approvals (TST1867)	3035560	FM 4470 (2022)
FM Approvals (TST1867)	3036747	FM 4470 (2022)
FM Approvals (TST1867)	3041949	FM 4474 (2020); FM 4470 (2022))
FM Approvals (TST1867)	3042666	FM 4470 (2022)
FM Approvals (TST1867)	3044047	FM 4470 (2022)
FM Approvals (TST1867)	3047398	FM 4474 (2020)
FM Approvals (TST1867)	3047700	FM 4470 (2022)
FM Approvals (TST1867)	3046870	FM 4474 (2020); FM 4470 (2022)
FM Approvals (TST1867)	797-08937-267	FM 4470 (2022)
FM Approvals (TST1867)	3050535	FM 4470 (2022)
FM Approvals (TST1867)	3051380	FM 4474 (2020); FM 4470 (2022)
FM Approvals (TST1867)	3052525	FM 4474 (2020); FM 4470 (2022)
FM Approvals (TST1867)	3053933	FM 4470 (2022)
FM Approvals (TST1867)	3054114	FM 4470 (2022)
FM Approvals (TST1867)	3055167	FM 4470 (2022)
FM Approvals (TST1867)	3055227	FM 4470 (2022)
FM Approvals (TST1867)	3055491	FM 4470 (2022)
FM Approvals (TST1867)	3060274	FM 4470 (2022)
FM Approvals (TST1867)	3060621	FM 4470 (2022)
FM Approvals (TST1867)	3061218	FM 4470 (2022)
FM Approvals (TST1867)	3062305	FM 4470 (2022)
FM Approvals (TST1867)	797-07749-267	FM 4470 (2022)
FM Approvals (TST1867)	PR452965	FM 4470 (2022)
FM Approvals (TST1867)	PR457741	FM 4470 (2022)
FM Approvals (TST1867)	RR205572	FM 4470 (2022)
FM Approvals (TST1867)	RR207314	FM 4470 (2022)
FM Approvals (TST1867)	RR207553	FM 4470 (2022)
FM Approvals (TST1867)	3061875	FM 4470 (2022)
FM Approvals (TST1867)	3061602	FM 4470 (2022)
Nemo| Etc LLC (TST6049)	4S-FBP-18001.09.18	ASTM D 6878 (2021)
Nemo| Etc LLC (TST6049)	4r-FBP-20-SSTHP-01.A	ASTM D 6878 (2021)
PRI Construction Materials Technologies (TST5878)	FBP-044-02-01.10	TAS 114(D& J) (2011); TAS 114(H) (1995); TAS 117(B) (1995)
PRI Construction Materials Technologies (TST5878)	FBP-044-02-01.14	FM 4474 (2020); TAS 114(D& J) (2011); TAS 114(C&H) (1995);TAS 117(A&B) (1995); ASTM D 1876 (2008(2015)e1)
PRI Construction Materials Technologies (TST5878)	FBP-054-02-02	FM 4474 (2020)
PRI Construction Materials Technologies (TST5878)	FBP-054-02-04	FM 4474 (2020)
PRI Construction Materials Technologies (TST5878)	FBP-054-02-05	FM 4474 (2020)
PRI Construction Materials Technologies (TST5878)	FBP-065-02-01	TAS 114(J) (2011); FM 4474 (2020)
PRI Construction Materials Technologies (TST5878)	FBP-066-02-01	TAS 114(J) (2011); FM 4474 (2020)
PRI Construction Materials Technologies (TST5878)	FBP-069-02-01	FM 4474 (2020)
PRI Construction Materials Technologies (TST5878)	FBP-070-02-01	FM 4474 (2020)
PRI Construction Materials Technologies (TST5878)	FBP-085-02-01	FM 4474 (2020); TAS 114(J) (2011)
PRI Construction Materials Technologies (TST5878)	FBP-086-02-01	FM 4474 (2020); TAS 114(J) (2011)
PRI Construction Materials Technologies (TST5878)	FBP-094-02-01	TAS 110 (2000)
PRI Construction Materials Technologies (TST5878)	FBP-119-02-01	FM 4474(B) (2020); TAS 114(D) (2011)
PRI Construction Materials Technologies (TST5878)	FBP-120-02-01	FM 4474(D) (2020); TAS 114(J) (2011)
PRI Construction Materials Technologies (TST5878)	FBP-122-02-01	FM 4474(D) (2020); TAS 114(J) (2011)
PRI Construction Materials Technologies (TST5878)	FBP-125-02-01	FM 4474(C) (2020); TAS 114(C) (1995)
PRI Construction Materials Technologies (TST5878)	FBP-128-02-01	FM 4470 (2022)
PRI Construction Materials Technologies (TST5878)	FBP-131-02-01	FM 4474(C) (2020); TAS 114(C) (1995)
PRI Construction Materials Technologies (TST5878)	FBP-134-02-01	FM 4474(C) (2020); TAS 114(C) (1995)
PRI Construction Materials Technologies (TST5878)	FBP-145-02-01	ASTM D 6878 (2021); TAS 110 (2000)
PRI Construction Materials Technologies (TST5878)	FBP-148-02-01	FM 4474(D) (2020); TAS 114(J) (2011)
PRI Construction Materials Technologies (TST5878)	FBP-149-02-01	FM 4474(D) (2020); TAS 114(J) (2011)
PRI Construction Materials Technologies (TST5878)	FBP-150-02-01	FM 4474(C) (2020)

This evaluation report is provided for State of Florida product approval under Rule 61G20-3. The manufacturer shall notify CREEK Technical Services, LLC of any product changes or quality assurance changes throughout the duration for which this report is valid. This evaluation report does not express nor imply warranty, installation, recommended use, or other product attributes that are not specifically addressed herein.

Entity	Report No.	Standard (Year)
PRI Construction Materials Technologies (TST5878)	FBP-153-02-01	FM 4474(D) (2020); TAS 114(J) (2011)
PRI Construction Materials Technologies (TST5878)	FBP-154-02-01	FM 4474(D) (2020); TAS 114(J) (2011)
PRI Construction Materials Technologies (TST5878)	FBP-158-02-01	FM 4474(D) (2020); TAS 114(J) (2011)
PRI Construction Materials Technologies (TST5878)	FBP-160-02-01	FM 4474(B) (2020); TAS 114(D) (2011)
PRI Construction Materials Technologies (TST5878)	FBP-160-02-02	FM 4474(C) (2020)
PRI Construction Materials Technologies (TST5878)	FBP-162-02-01	ASTM D 1970 (2021)
PRI Construction Materials Technologies (TST5878)	FBP-165-02-01	FM 4474(D) (2020); TAS 114(J) (2011)
PRI Construction Materials Technologies (TST5878)	FBP-165-02-01A	FM 4474(D) (2020); TAS 114(J) (2011)
PRI Construction Materials Technologies (TST5878)	FBP-165-02-02	FM 4474(B) (2020); TAS 114(D) (2011)
PRI Construction Materials Technologies (TST5878)	FBP-172-02-01	FM 4474(D) (2020); TAS 114(J) (2011)
PRI Construction Materials Technologies (TST5878)	FBP-174-02-01	ASTM D 3746 [1985(2022)]
PRI Construction Materials Technologies (TST5878)	FBP-175-02-01	FM 4474(D) (2020); TAS 114(J) (2011)
PRI Construction Materials Technologies (TST5878)	FBP-175-02-02	FM 4474(C) (2020)
PRI Construction Materials Technologies (TST5878)	FBP-177-02-01	FM 4474(D) (2020); TAS 114(J) (2011)
PRI Construction Materials Technologies (TST5878)	FBP-177-02-01C	FM 4474(D) (2020); TAS 114(J) (2011)
PRI Construction Materials Technologies (TST5878)	FBP-177-02-02	FM 4474(B) (2020); TAS 114(D) (2011)
PRI Construction Materials Technologies (TST5878)	FBP-178-02-01	FM 4474(D) (2020); TAS 114(J) (2011)
PRI Construction Materials Technologies (TST5878)	FBP-178-02-02	FM 4474(C) (2020)
PRI Construction Materials Technologies (TST5878)	FBP-178-02-06	FM 4474(B) (2020); TAS 114(D) (2011)
PRI Construction Materials Technologies (TST5878)	FBP-180-02-01A	FM 4474(C) (2020)
PRI Construction Materials Technologies (TST5878)	FBP-181-02-01A	FM 4474(C) (2020)
PRI Construction Materials Technologies (TST5878)	FBP-182-02-01	FM 4474(D) (2020); TAS 114(J) (2011)
PRI Construction Materials Technologies (TST5878)	FBP-184-02-01	FM 4474(D) (2020); TAS 114(J) (2011)
PRI Construction Materials Technologies (TST5878)	FBP-185-02-01	FM 4474(C) (2020)
PRI Construction Materials Technologies (TST5878)	FBP-185-02-02	FM 4474(B) (2020); TAS 114(D) (2011)
PRI Construction Materials Technologies (TST5878)	FBP-186-02-01	FM 4474(C) (2020)
PRI Construction Materials Technologies (TST5878)	FBP-190-02-01	FM 4474(B) (2020); TAS 114(D) (2011)
PRI Construction Materials Technologies (TST5878)	FBP-191-02-01	UL 1897 (2015)
PRI Construction Materials Technologies (TST5878)	FBP-191-02-02	FM 4474(B) (2020)
PRI Construction Materials Technologies (TST5878)	FBP-191-02-02A	FM 4474(C) (2020)
PRI Construction Materials Technologies (TST5878)	FBP-193-02-02	FM 4474(D) (2020); TAS 114(J) (2011)
PRI Construction Materials Technologies (TST5878)	FBP-194-02-01	FM 4474(C); (2020)
PRI Construction Materials Technologies (TST5878)	FBP-194-02-02	FM 4474(C); (2020)
PRI Construction Materials Technologies (TST5878)	FBP-194-02-03	FM 4474(B) (2020); TAS 114(D) (2011)
PRI Construction Materials Technologies (TST5878)	FBP-196-02-01	FM 4474(C) (2020)
PRI Construction Materials Technologies (TST5878)	FBP-196-02-02	UL 1897 (2015)
PRI Construction Materials Technologies (TST5878)	FBP-196-02-04	FM 4474(D) (2020); TAS 114(J) (2011)
PRI Construction Materials Technologies (TST5878)	FBP-206-02-01	FM 4474(D) (2020); TAS 114(J) (2011)
PRI Construction Materials Technologies (TST5878)	FBP-206-02-02	UL 1897 (2015)
PRI Construction Materials Technologies (TST5878)	FBP-208-02-01	TAS 110 (2000)
PRI Construction Materials Technologies (TST5878)	FBP-213-02-01	FM 4474(D) (2020); TAS 114(J) (2011)
PRI Construction Materials Technologies (TST5878)	FBP-213-02-03	FM 4474(C) (2020)
PRI Construction Materials Technologies (TST5878)	FBP-216-02-01	FM 4474(C) (2020)
PRI Construction Materials Technologies (TST5878)	FBP-220-02-01	FM 4474(D) (2020); TAS 114(J) (2011); UL 1897 (2015)
PRI Construction Materials Technologies (TST5878)	FBP-220-02-02	FM 4474(C) (2020)
PRI Construction Materials Technologies (TST5878)	FBP-222-02-01	FM 4474(C) (2020)
PRI Construction Materials Technologies (TST5878)	FBP-225-02-01	FM 4474(D) (2020); TAS 114(J) (2011); UL 1897 (2015)
PRI Construction Materials Technologies (TST5878)	FBP-230-02-01	FM 4474(D) (2020); TAS 114(J) (2011); UL 1897 (2015)
PRI Construction Materials Technologies (TST5878)	FBP-233-02-01	FM 4474(D) (2020); TAS 114(J) (2011); UL 1897 (2015)
PRI Construction Materials Technologies (TST5878)	FBP-233-02-02	TAS 114(C) (1995)
PRI Construction Materials Technologies (TST5878)	FBP-233-02-03	FM 4474(D) (2020); TAS 114(J) (2011); UL 1897 (2015)
PRI Construction Materials Technologies (TST5878)	FBP-235-02-01	FM 4474(D) (2020); TAS 114(J) (2011); UL 1897 (2015)
PRI Construction Materials Technologies (TST5878)	FBP-235-02-02	FM 4474(D) (2020); TAS 114(J) (2011); UL 1897 (2015)
PRI Construction Materials Technologies (TST5878)	FBP-238-02-01	FM 4474(D) (2020); TAS 114(J) (2011); UL 1897 (2015)
PRI Construction Materials Technologies (TST5878)	FBP-238-02-03	FM 4474(D) (2020); TAS 114(J) (2011); UL 1897 (2015)
PRI Construction Materials Technologies (TST5878)	FBP-239-02-01	FM 4474(D) (2020); TAS 114(J) (2011); UL 1897 (2015)

This evaluation report is provided for State of Florida product approval under Rule 61G20-3. The manufacturer shall notify CREEK Technical Services, LLC of any product changes or quality assurance changes throughout the duration for which this report is valid. This evaluation report does not express nor imply warranty, installation, recommended use, or other product attributes that are not specifically addressed herein.

Entity	Report No.	Standard (Year)
PRI Construction Materials Technologies (TST5878)	FBP-240-02-01	FM 4474(D) (2020); TAS 114(J) (2011); UL 1897 (2015)
PRI Construction Materials Technologies (TST5878)	FBP-241-02-01	FM 4474(D) (2020); TAS 114(J) (2011); UL 1897 (2015)
PRI Construction Materials Technologies (TST5878)	FBP-242-02-01	FM 4474(D) (2020); TAS 114(J) (2011); UL 1897 (2015)
PRI Construction Materials Technologies (TST5878)	FBP-243-02-01	FM 4474(B) (2020); TAS 114(D) (2011)
PRI Construction Materials Technologies (TST5878)	FBP-254-02-02	FM 4474(C) (2020)
PRI Construction Materials Technologies (TST5878)	FBP-258-02-02B	FM 4474(D) (2020); TAS 114(J) (2011); UL 1897 (2015)
PRI Construction Materials Technologies (TST5878)	FBP-258-02-02C	FM 4474(C) (2020)
PRI Construction Materials Technologies (TST5878)	FBP-260-02-01	FM 4474(C) (2020)
PRI Construction Materials Technologies (TST5878)	FBP-260-02-02	FM 4474(B) (2020); TAS 114(D) (2011)
PRI Construction Materials Technologies (TST5878)	FBP-265-02-02	FM 4474(C) (2020)
PRI Construction Materials Technologies (TST5878)	FBP-271-02-02	FM 4474(D) (2020); TAS 114(J) (2011); UL 1897 (2015)
PRI Construction Materials Technologies (TST5878)	FBP-276-02-01	FM 4474(D) (2020); TAS 114(J) (2011); UL 1897 (2015)
PRI Construction Materials Technologies (TST5878)	FBP-277-02-01	FM 4474(D) (2020); TAS 114(J) (2011); UL 1897 (2015)
PRI Construction Materials Technologies (TST5878)	FBP-279-02-01	FM 4474(D) (2020); TAS 114(J) (2011); UL 1897 (2015)
PRI Construction Materials Technologies (TST5878)	FBP-282-02-01	FM 4474(B) (2020); TAS 114(D) (2011)
PRI Construction Materials Technologies (TST5878)	FBP-283-02-02B	FM 4474(D) (2020); TAS 114(J) (2011); UL 1897 (2015)
PRI Construction Materials Technologies (TST5878)	FBP-283-02-03	FM 4474(D) (2020); TAS 114(J) (2011); UL 1897 (2015)
PRI Construction Materials Technologies (TST5878)	FBP-291-02-01	FM 4474(D) (2020); TAS 114(J) (2011); UL 1897 (2015)
PRI Construction Materials Technologies (TST5878)	FBP-298-02-01	FM 4474(D) (2020); TAS 114(J) (2011); UL 1897 (2015)
PRI Construction Materials Technologies (TST5878)	FBP-304-02-01	FM 4474(D) (2020); TAS 114(J) (2011); UL 1897 (2015)
PRI Construction Materials Technologies (TST5878)	FBP-313-02-01	FM 4474(D) (2020); TAS 114(J) (2011); UL 1897 (2015)
PRI Construction Materials Technologies (TST5878)	FBP-313-02-02	FM 4474(B) (2020); TAS 114(D) (2011)
PRI Construction Materials Technologies (TST5878)	FBP-317-02-01	FM 4474(D) (2020); TAS 114(J) (2011); UL 1897 (2015)
PRI Construction Materials Technologies (TST5878)	FBP-317-02-02	FM 4474(D) (2020); TAS 114(J) (2011); UL 1897 (2015)
PRI Construction Materials Technologies (TST5878)	FBP-318-02-01	FM 4474(B) (2020); TAS 114(D) (2011)
PRI Construction Materials Technologies (TST5878)	FBP-322-02-02	FM 4474(D) (2020); TAS 114(J) (2011); UL 1897 (2015)
PRI Construction Materials Technologies (TST5878)	FBP-324-02-02	FM 4474(D) (2020); TAS 114(J) (2011); UL 1897 (2015)
PRI Construction Materials Technologies (TST5878)	FBP-331-02-01	FM 4474(D) (2020); TAS 114(J) (2011); UL 1897 (2015)
PRI Construction Materials Technologies (TST5878)	FBP-334-02-01	FM 4474(D) (2020); TAS 114(J) (2011); UL 1897 (2015)
PRI Construction Materials Technologies (TST5878)	FBP-334-02-02	FM 4474(D) (2020); TAS 114(J) (2011); UL 1897 (2015)
PRI Construction Materials Technologies (TST5878)	FBP-336-02-01	FM 4474(B) (2020); TAS 114(D) (2011)
PRI Construction Materials Technologies (TST5878)	FBP-338-02-01	FM 4474(D) (2020); TAS 114(J) (2011); UL 1897 (2015)
PRI Construction Materials Technologies (TST5878)	FBP-339-02-02A	FM 4474(D) (2020); TAS 114(J) (2011); UL 1897 (2015)
PRI Construction Materials Technologies (TST5878)	FBP-339-02-02B	FM 4474(D) (2020); TAS 114(J) (2011); UL 1897 (2015)
PRI Construction Materials Technologies (TST5878)	FBP-340-02-01A.1	UL 1897 (2015)
PRI Construction Materials Technologies (TST5878)	FBP-341-02-01	FM 4474(C) (2020)
PRI Construction Materials Technologies (TST5878)	FBP-345-02-01	FM 4474(D) (2020); TAS 114(J) (2011); UL 1897 (2015)
PRI Construction Materials Technologies (TST5878)	FBP-352-02-01.1	TAS 114(D) (2011)
PRI Construction Materials Technologies (TST5878)	FBP-353-02-01	FM 4474(D) (2020); TAS 114(J) (2011); UL 1897 (2015)

This evaluation report is provided for State of Florida product approval under Rule 61G20-3. The manufacturer shall notify CREEK Technical Services, LLC of any product changes or quality assurance changes throughout the duration for which this report is valid. This evaluation report does not express nor imply warranty, installation, recommended use, or other product attributes that are not specifically addressed herein.

Entity	Report No.	Standard (Year)
PRI Construction Materials Technologies (TST5878)	FBP-355-02-01	FM 4474(D) (2020); TAS 114(J) (2011); UL 1897 (2015)
PRI Construction Materials Technologies (TST5878)	FBP-356-02-01	UL 1897 (2015)
PRI Construction Materials Technologies (TST5878)	FBP-357-02-01	TAS 114(D) (2011)
PRI Construction Materials Technologies (TST5878)	FBP-358-02-01	FM 4474(D) (2020); TAS 114(J) (2011); UL 1897 (2015)
PRI Construction Materials Technologies (TST5878)	FBP-359-02-01	FM 4474(D) (2020); TAS 114(J) (2011); UL 1897 (2015)
PRI Construction Materials Technologies (TST5878)	FBP-362-02-01	FM 4474(D) (2020); TAS 114(J) (2011); UL 1897 (2015)
PRI Construction Materials Technologies (TST5878)	FBP-363-02-01	FM 4474(D) (2020); TAS 114(J) (2011); UL 1897 (2015)
PRI Construction Materials Technologies (TST5878)	FBP-367-02-01	FM 4474(D) (2020); TAS 114(J) (2011); UL 1897 (2015)
PRI Construction Materials Technologies (TST5878)	FBP-368-02-01	ASTM D 6878 (2021); TAS 110 (2000)
PRI Construction Materials Technologies (TST5878)	FBP-373-02-01A	TAS 110 (2000)
PRI Construction Materials Technologies (TST5878)	FBP-373-02-01B	ASTM D 6878 (2021)
PRI Construction Materials Technologies (TST5878)	FBP-373-02-01C	TAS 110 (2000)
PRI Construction Materials Technologies (TST5878)	FBP-375-02-01	ASTM D 1876 (2008(2015)e1)
PRI Construction Materials Technologies (TST5878)	FBP-389-02-01	FM 4474(C) (2020)
PRI Construction Materials Technologies (TST5878)	FBP-389-02-02	FM 4474(D) (2020); TAS 114(J) (2011); UL 1897 (2015)
PRI Construction Materials Technologies (TST5878)	348T0047	FM 4474(D) (2020); UL 1897 (2015)
PRI Construction Materials Technologies (TST5878)	348T0088	TAS 110 (2000)
PRI Construction Materials Technologies (TST5878)	348T0089	TAS 110 (2000)
PRI Construction Materials Technologies (TST5878)	348T0090	TAS 110 (2000)
PRI Construction Materials Technologies (TST5878)	348T0111	FM 4474(B) (2020); TAS 114(D) (2011)
PRI Construction Materials Technologies (TST5878)	348T0117	FM 4474(B) (2020); TAS 114(D) (2011)
PRI Construction Materials Technologies (TST5878)	348T0131	ASTM D 3746 [1985(2022)]; TAS 110 (2000); ASTM D 6878 (2021)
PRI Construction Materials Technologies (TST5878)	348T0131A	ASTM D 6878 (2021)
PRI Construction Materials Technologies (TST5878)	348T0132	FM 4474(D) (2020); TAS 114(J) (2011); UL 1897 (2015)
PRI Construction Materials Technologies (TST5878)	348T0140	FM 4474(D) (2020); UL 1897 (2015)
Trinity|ERD (TST6049)	F11080.09.08	TAS 114(J) (2011[1])
Trinity|ERD (TST6049)	SFS-SC10010.02.16	FM 4474(D) (2020); TAS 114(J) (2011); UL 1897 (2015)
Trinity|ERD (TST6049)	F38200.04.15-R1	ASTM D 6878 (2021)

[1] Standard test method has been found equivalent to FM 4474 (2020) referenced by the FBC.

This evaluation report is provided for State of Florida product approval under Rule 61G20-3. The manufacturer shall notify CREEK Technical Services, LLC of any product changes or quality assurance changes throughout the duration for which this report is valid. This evaluation report does not express nor imply warranty, installation, recommended use, or other product attributes that are not specifically addressed herein.

LIMITATIONS

1. Fire classification is not within the scope of this evaluation.
2. Foam plastic insulation shall be separated from the building interior in accordance with the FBC 2603.4 and 2603.6.
3. The roof deck and the roof deck attachment information are provided based on testing. FBC requirements for the rational design of the roof deck, including the attachment, are not within the scope of this evaluation.
4. In the HVHZ, fastener spacing for insulation attachment is determined using a Minimum Characteristic Force (F') of 275 lbf as demonstrated via testing to TAS 105. If the field tested fastener value is below 275 lbf, then insulation attachment shall not be acceptable.
5. In the HVHZ, fastener spacing for base sheets or membrane attachment shall meet the minimum fastener resistance value and the *MDP* for the specified assembly. It is permissible for a qualified professional to submit a revised fastener spacing utilizing the withdrawal resistance value obtained from TAS 105 testing and calculations performed in accordance with RAS 117 and/or RAS 137, when the fastener resistance is found less than required.
6. In the HVHZ, if mechanical attachment through the lightweight insulating concrete to the structural deck is proposed, a field fastener withdrawal test shall be conducted in compliance with TAS 105 to determine equivalent or increased attachment densities. Revised fastener densities shall be submitted utilizing the withdrawal resistance value obtained from TAS 105 testing and calculations performed in accordance with RAS 117 and/or RAS 137.
7. **HVHZ:** For assemblies containing mechanical attachment, the allowable uplift pressure for the selected assembly shall meet or exceed the minimum design loads as determined in accordance with the FBC Chapter 16. The attachment density may be increased by a qualified design professional, as necessary, to meet the design pressure requirements in the periphery zones. Calculations shall be conducted in compliance with RAS 117 and/or RAS 137.
   Non-HVHZ: For assemblies containing mechanical attachment or adhered in ribbon-applied adhesive, the allowable uplift pressure for the selected assembly shall meet or exceed the minimum design loads as determined in accordance with the FBC Chapter 16. The attachment density may be increased by a qualified design professional, as necessary, to meet the design pressure requirements in the periphery zones. Calculations shall be conducted in compliance with RAS 117, RAS 137, or Section 2.2.10.1 FM LPDS 1-29 (February 2020).
8. Reroofing applications shall be examined in accordance with FBC Section 1511 outside of the HVHZ and FBC Section 1521 within the HVHZ. For mechanically fastened systems, a field withdrawal resistance test (TAS 105 in the HVHZ; ANSI/SPRI FX-1 or TAS 105 in the non-HVHZ) shall be conducted by a qualified professional to ensure the fastener meets the minimum design load requirements of the system. For adhered systems, a field uplift resistance test (TAS 124 in the HVHZ; ASTM E 907, FM LPDS 1-52, ANSI/SPRI IA-1, or TAS 124 in the non-HVHZ) shall be conducted to confirm conformance of the existing to the minimum design loads.
9. **HVHZ:** For assemblies containing fully adhered or ribbon adhered attachment, or where extrapolation of the assembly is not permitted, the *MDP* for the selected assembly shall meet or exceed the minimum design loads as determined in accordance with the FBC Chapter 16 without augmentation.
   Non-HVHZ: For assemblies adhered in ribbon-applied adhesive, the allowable uplift pressure for the selected assembly shall meet or exceed the minimum design loads as determined in accordance with the FBC Chapter 16. The attachment density may be increased by a qualified design professional, as necessary, to meet the design pressure requirements in the periphery zones. Calculations shall be conducted in compliance with Section 2.2.10.1 FM LPDS 1-29 (July 2022).
10. Installation of the evaluated products shall comply with this report, the FBC, and the manufacturer's published application instructions. Where discrepancies exist between these sources, the more restrictive and FBC compliant installation detail shall prevail.
11. The minimum roof slope shall be 1/4:12 for new construction.
12. Fasteners applied in rows may impart concentrated loads to structural components of the building. Designers should consider the fastener spacing of the roof system in relation to the spacing of structural supports when selecting a roof system.
13. Materials shall conform to FBC Section 1711 as well as Section 1506 outside of the HVHZ and FBC Section 1517 within the HVHZ.
14. FBC Section 1504.3.1.1 is not within the scope of this evaluation.
15. All products listed in this report shall be manufactured under a quality assurance program in compliance with Rule 61G20-3.

This evaluation report is provided for State of Florida product approval under Rule 61G20-3. The manufacturer shall notify CREEK Technical Services, LLC of any product changes or quality assurance changes throughout the duration for which this report is valid. This evaluation report does not express nor imply warranty, installation, recommended use, or other product attributes that are not specifically addressed herein.

COMPLIANCE STATEMENT

This report has been prepared in accordance with F.A.C. Rule 61G20-3.

This item has been digitally signed and sealed by Zachary R. Priest, PE, on 7/30/2026.

Printed copies of this document are not considered signed and sealed and the signature must be verified on any electronic copies.

Digitally signed by Zachary R. Priest
2026.07.30 11:32:57 -04'00'

Zachary R. Priest, P.E.
Florida Registration No. 74021
Organization No. ANE9641

CERTIFICATION OF INDEPENDENCE

CREEK Technical Services, LLC does not have, nor will it acquire, a financial interest in any company manufacturing or distributing products under this evaluation.

CREEK Technical Services, LLC is not owned, operated, or controlled by any company manufacturing or distributing products under this evaluation.

Zachary R. Priest, P.E. does not have, nor will acquire, a financial interest in any company manufacturing or distributing products under this evaluation.

Zachary R. Priest, P.E. does not have, nor will acquire, a financial interest in any other entity involved in the approval process of the product.

APPENDICES

1) APPENDIX A – Installation (9 pages)
2) APPENDIX B – Nomenclature and Approved Assemblies (85 pages)

This evaluation report is provided for State of Florida product approval under Rule 61G20-3. The manufacturer shall notify CREEK Technical Services, LLC of any product changes or quality assurance changes throughout the duration for which this report is valid. This evaluation report does not express nor imply warranty, installation, recommended use, or other product attributes that are not specifically addressed herein.

INSTALLATION

Note - Refer to the APPROVED ASSEMBLIES section of this report for specific installation details of a selected assembly.

Unless otherwise specified in this report the following installation details shall be met for the named products:

Component	Product	Installation Detail
Fasteners, Battens, Plates, & QuickSeam R.M.A. Strip	Elevate All-Purpose Fasteners	Min.0.75-inch penetration through the top rib of the steel deck or wood deck
	Elevate All-Purpose S Fasteners	
	Elevate #12 Fasteners	
	Elevate Concrete Drive	Min. 1.25" embedment into min. 3" thick structural concrete
	Elevate HD Seam Plate	2 3/8-inch diameter; 0.036-inch Galvalume steel plate with eyehooks
	Elevate HD Plus Seam Plate	2.75-inch diameter; 0.037-inch Galvalume steel plate with eyehooks
	Elevate Heavy Duty Fastener	Min. 0.75-inch penetration through the top rib of the steel deck or wood deck; Min. penetration 1-inch into concrete deck (Heavy Duty Plus shall not be used in concrete deck)
	Elevate Heavy Duty Plus Fastener	
	SFS Intec Dekfast #14	
	SFS intec Dekfast #15 HS	
	Elevate Insulation Fastening Plate	3-inch diameter; Galvalume steel plate
	Trufast 3" Metal Seam Plates	
	Elevate 1.7" LWC Base Ply Fastener	Full embedment of shank into substrate
	Elevate Metal Batten Bar	1-inch wide steel batten bar
	Coiled Metal Batten Bar	
	Elevate Polymer Batten Strip	0.75-inch wide plastic batten strip
	Elevate Pre-Assembled Insulation Plate	Elevate #12 Fastener and Elevate Insulation Fastening Plate, pre-assembled; Min.0.75-inch penetration through the top rib of the steel deck or wood deck
	Elevate Purlin Fastener	Min. 0.75-inch penetration through purlin
	SFS Intec SFS Purlin Fastener	
	Elevate UltraPly QuickSeam R.M.A Strip	Prime at a rate of 200-250 ft^2/gal with Elevate Single-Ply QuickPrime Primer or QuickPrime Plus Primer prior to adhering strip
	Elevate UltraPly TPO InvisiWeld Plate	Min. 3-inch diameter; Induction welded in the field of membrane with RhinoBond® welding tool; welds not permitted at lap seams
	Elevate UltraPly TPO InvisiWeld -S Plate	Min. 3-inch diameter; Induction welded in the field of membrane with *isoweld*® 3000 welding tool; welds not permitted at lap seams
	Trufast VERSA-FAST Plate	3-inch diameter; 0.017-inch thick Galvalume steel plate with one (1) center hole and eight (8) equally spaced perimeter holes for multiple fastening
	Trufast VERSA-FAST Fastener	Min. 2-inch embedment into LWIC or Gypsum decks; Min. 3/4-inch penetration through wood decks
Vapor Barrier	Elevate V-Force Vapor Barrier Membrane	Self-adhered; Min. 3-inch side laps; Min. 6-inch end laps; All substrates except metal decks must be primed with vapor barrier primer.
	Elevate APP 80 Glass Base	Min. 3-inch lap; Torch adhered
	Elevate SBS Glass Base Torch	
	Elevate SBS Glass FR Torch	
	Elevate SBS Poly Torch Base	
Vapor Barrier Primer	Elevate SA-LVOC Primer	Applied at a rate of 0.5 gal/sq.
	Elevate SA-Solvent Based (SB) Primer	
	Elevate SA-Water Based (WB) Primer	Applied at a rate of 150-200 ft^2/gal
Insulation Adhesives	Elevate I.S.O. Stick	Partially adhered in 0.75 to 1-inch wide ribbons
	Elevate I.S.O. Fix II	Partially adhered in 0.75 to 1-inch wide ribbons
	Elevate I.S.O. Twin Pack Insulation Adhesive	Partially adhered in 0.5 to 0.75-inch wide ribbons
	Elevate I.S.O. Spray R	Partially adhered in 0.75 to 1-inch wide ribbons
	Elevate Twin Jet	Partially adhered in 1 to 1.25-inch wide ribbons

This evaluation report is provided for State of Florida product approval under Rule 61G20-3. The manufacturer shall notify CREEK Technical Services, LLC of any product changes or quality assurance changes throughout the duration for which this report is valid. This evaluation report does not express nor imply warranty, installation, recommended use, or other product attributes that are not specifically addressed herein.

Component	Product	Installation Detail
Insulation/Cover Boards	Georgia-Pacific DensDeck or DensDeck Prime	Min. 0.25-inch thick
	Elevate ISO 95+ GL	Min. 0.5-inch thick; Min. 20 psi; Adhered boards shall be a maximum 4 ft. x 4 ft.
	Elevate ISOGARD GL	
	GenFlex ISO Insulation	
	Elevate ISOGARD CG	
	Elevate RESISTA	
	GenFlex Coated Glass Facer	
	Elevate ISO 95+ GL (Tapered)	0.5-inch to start with 0.25-inch per ft taper; Adhered boards shall be a maximum 4 ft x 4 ft
	Elevate ISOGARD GL (Tapered)	
	Elevate ISOGARD CG (Tapered)	
	Elevate RESISTA (Tapered)	
	GenFlex Coated Glass Facer (Tapered)	
	GenFlex ISO Insulation (Tapered)	
	Elevate ISOGARD HD	Min. 0.5-inch thick; Adhered boards shall be a maximum 4 ft. x 4 ft.
	GenFlex HD ISO	
	Elevate ISOGARD HD Composite	Min. 1.5-inch thick; Adhered boards shall be a maximum 4 ft. x 4 ft.
	GenFlex HD Composite ISO	
	USG SECUROCK Glass-Mat Roof Board	Min. 0.25-inch thick
	USG SECUROCK Gypsum-Fiber Roof Board	Min. 0.25-inch thick
Membrane Adhesives	ASTM D 312, Type IV Asphalt	Fully adhered within the EVT range at a rate of 25-40 lbs/100 ft^2
	Elevate I.S.O. Spray R	Partially adhered in 0.75 to 1-inch wide ribbons
	Elevate Jet Bond Spray Adhesive	Applied to both the bottom surface of the roof cover and the top surface of the substrate; Applied with 2 in. overlap at a rate of 1.75-2.2 lbs/100ft^2 to each surface with bareback membranes; Applied with 6 in. overlap at a rate of 2.5-2.7 lbs/100ft^2 to each surface with fleeceback membranes
	Elevate Single-Ply LVOC Bonding Adhesive	Fully adhered at rate of 45-60 ft^2/gal; Applied simultaneously to underside of membrane and substrate
	Elevate Single-Ply LVOC 1168 Bonding Adhesive	
	Elevate UltraPly Bonding Adhesive	
	Elevate Twin Jet	Adhered in spatter at a rate of 5.8 lbs/sq.
	Elevate Water Based Bonding Adhesive P	Fully adhered at a rate of 100-120 ft^2/gal.
	Elevate XR Stick	Partially adhered in 0.75 to 1-inch wide ribbons
	Elevate XR Bonding Adhesive	Fully adhered at rate of 70-90 ft^2/gal; Applied to substrate only
	Owens Corning PermaMop Asphalt	Fully adhered within the EVT range at a rate of 25-40 lbs/100 ft^2
Base Sheets	Elevate MB Base	Min. 2-inch wide side-laps; Side-laps shall be installed perpendicular to the direction of the steel deck ribs for mechanically attached systems
	Elevate Channel Venting Base	Min. 3-inch wide side-laps; Min. 6-inch end laps; Side-laps shall be installed perpendicular to the direction of the steel deck ribs for mechanically attached systems
	BASEGARD SA	
	Elevate Ply IV (4)	
	Elevate Ply VI (6)	
	Elevate SBS Base	
	Elevate SBS Base-P	
	Elevate SBS Glass Torch Base	
	Elevate SBS Glass Torch Base 1.5	
	Elevate SBS PolyBase	
	Elevate SBS Poly Torch Base	
	Elevate SBS Premium Base	

This evaluation report is provided for State of Florida product approval under Rule 61G20-3. The manufacturer shall notify CREEK Technical Services, LLC of any product changes or quality assurance changes throughout the duration for which this report is valid. This evaluation report does not express nor imply warranty, installation, recommended use, or other product attributes that are not specifically addressed herein.

Base Sheets (Cont'd)	Elevate SBS Premium Poly Base	Min. 3-inch wide side-laps; Min. 6-inch end laps; Side-laps shall be installed perpendicular to the direction of the steel deck ribs for mechanically attached systems
	Elevate SBS Smooth	
Single-Ply Membrane	Elevate UltraPly TPO	Min. 2-inch wide side-laps with min. 1.5-inch wide heat weld; In-lap fastened systems shall have min. 6-inch wide side-laps with min. 1.5-inch wide heat weld; Side-laps shall be installed perpendicular to the direction of the steel deck ribs for mechanically attached systems
	Elevate UltraPly TPO Flex Adhered	
	Elevate UltraPly TPO Flex SA	
	Elevate UltraPly TPO SA	
	Elevate UltraPly TPO XR 100	
	Elevate UltraPly TPO XR 115	
	Elevate UltraPly TPO XR 135	
Cellular Lightweight Insulating Concrete	Min. 300 psi Celcore MF with HS Rheology Admixture	Slurry coat min. 0.25-inch thick; 1-inch thick EPS board (1 lbs/ft^3); Min. 2-inch thick top coat; Celcore PVA curing compound applied at rate of 300 ft^2/gal
	Celcore S-1	Deck is treated by applying a continuous film with a broom prior to placement of the Celcore lightweight concrete
	Celcore Sanded Bonding Surface (SBS)	Applied at a rate of 100 ft^2/gal
	Min. 300 psi Mearlcrete	Slurry coat min. 0.25-inch thick; 1" thick EPS board (1 lbs/ft^3); Min. 2-inch thick top coat
	Min. 300 psi Elastizell	
	Min. 300 psi Concrecel	
	Min. 200 psi Cellular Lightweight Concrete	

Insulation/Cover Board Fastening Patterns	
Description	Fastening Pattern
4 per 4 ft. x 4 ft. board	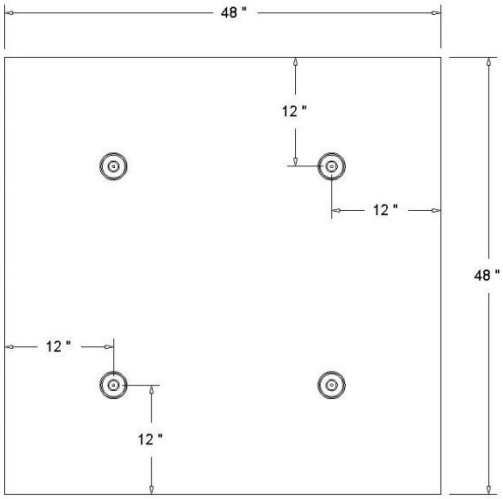 (Max. 4.0ft^2 contributory area per fastener)

This evaluation report is provided for State of Florida product approval under Rule 61G20-3. The manufacturer shall notify CREEK Technical Services, LLC of any product changes or quality assurance changes throughout the duration for which this report is valid. This evaluation report does not express nor imply warranty, installation, recommended use, or other product attributes that are not specifically addressed herein.

Insulation/Cover Board Fastening Patterns	
Description	Fastening Pattern
4 per 4 ft. x 8 ft. board	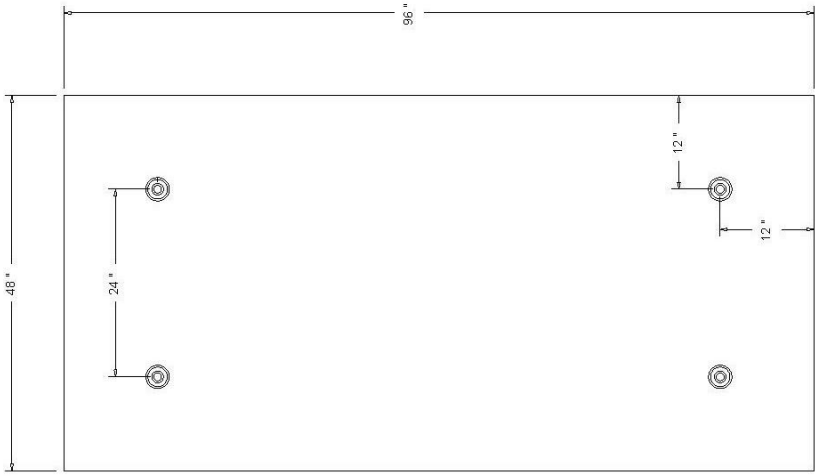 (Max. 8ft^2 contributory area per fastener)
5 per 4 ft. x 8 ft. board	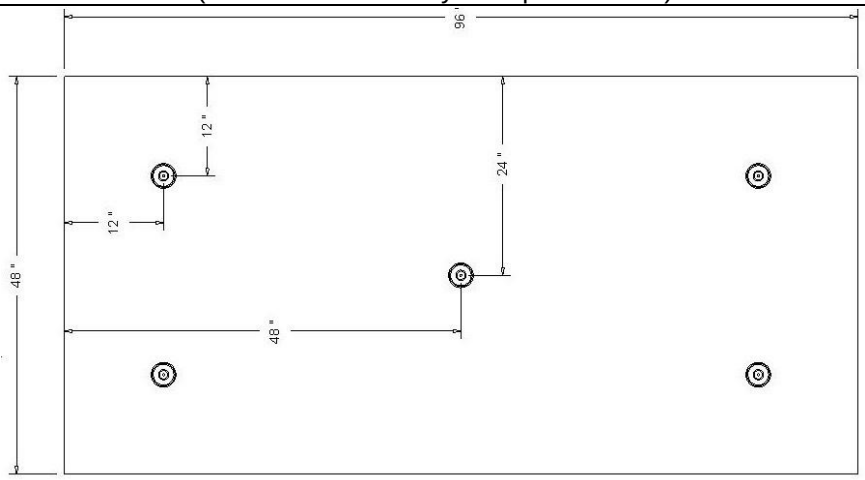 (Max. 6.4ft^2 contributory area per fastener)
6 per 4 ft. x 8 ft. board	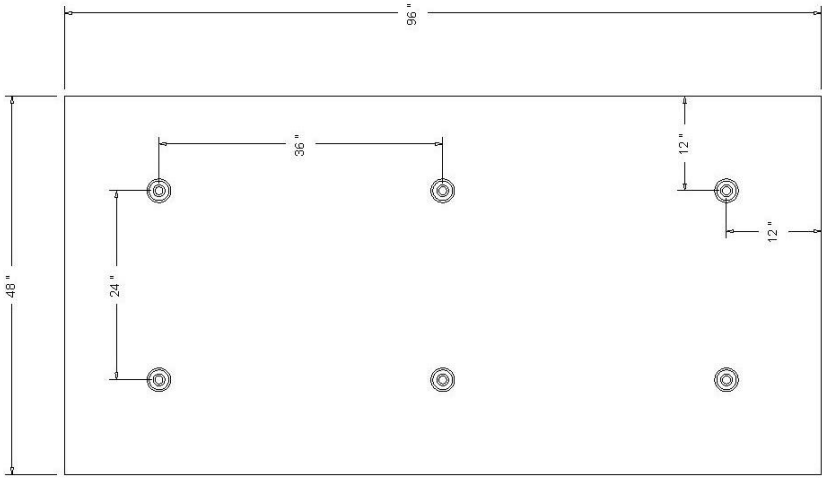 (Max. 5.33ft^2 contributory area per fastener)

This evaluation report is provided for State of Florida product approval under Rule 61G20-3. The manufacturer shall notify CREEK Technical Services, LLC of any product changes or quality assurance changes throughout the duration for which this report is valid. This evaluation report does not express nor imply warranty, installation, recommended use, or other product attributes that are not specifically addressed herein.

Insulation/Cover Board Fastening Patterns	
Description	Fastening Pattern
8 per 4 ft. x 8 ft. board	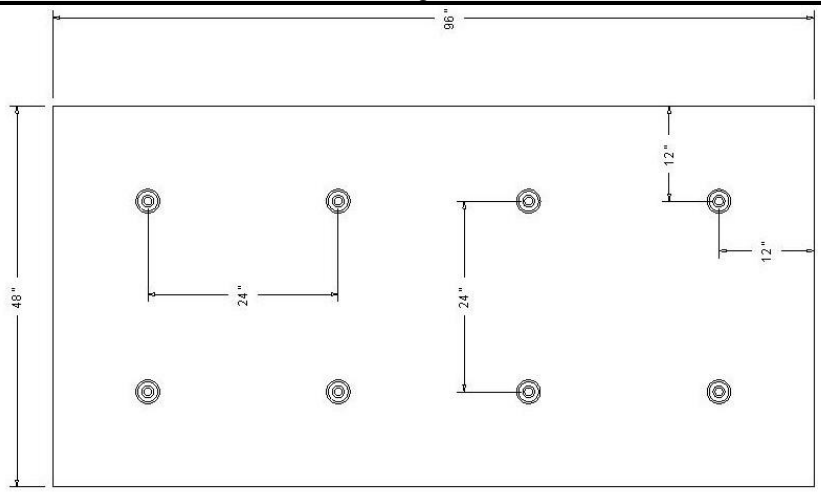 (Max. 4.00ft^2 contributory area per fastener)
10 per 4 ft. x 8 ft. board	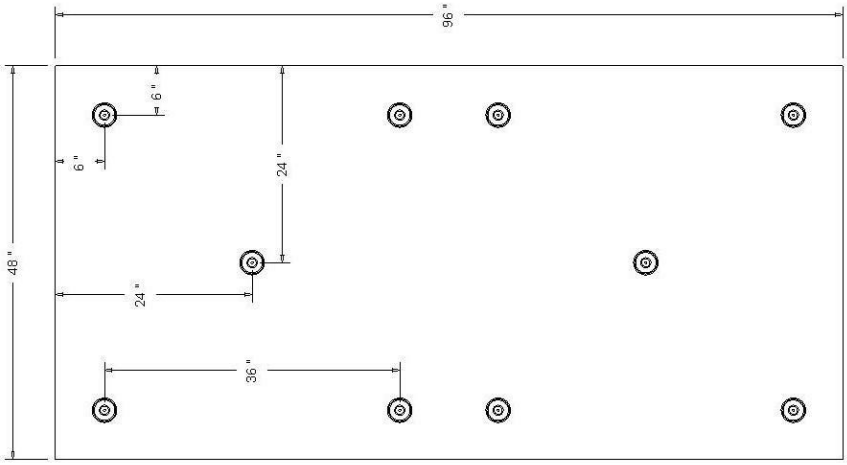 (Max. 3.2ft^2 contributory area per fastener)
10 per 4 ft. x 8 ft. board (Alt. Pattern)	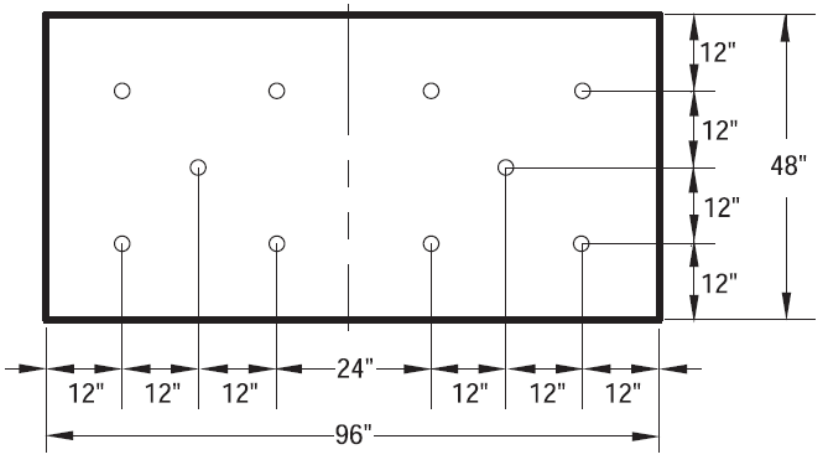 (Max. 3.2ft^2 contributory area per fastener)

This evaluation report is provided for State of Florida product approval under Rule 61G20-3. The manufacturer shall notify CREEK Technical Services, LLC of any product changes or quality assurance changes throughout the duration for which this report is valid. This evaluation report does not express nor imply warranty, installation, recommended use, or other product attributes that are not specifically addressed herein.

Insulation/Cover Board Fastening Patterns	
Description	Fastening Pattern
12 per 4 ft. x 8 ft. board	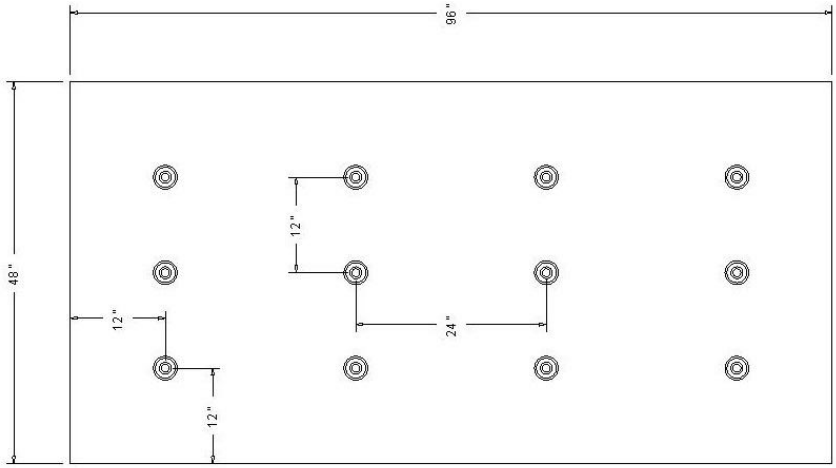 (Max. 2.67ft^2 contributory area per fastener)
12 per 4 ft. x 8 ft. Board (Alt. Pattern)	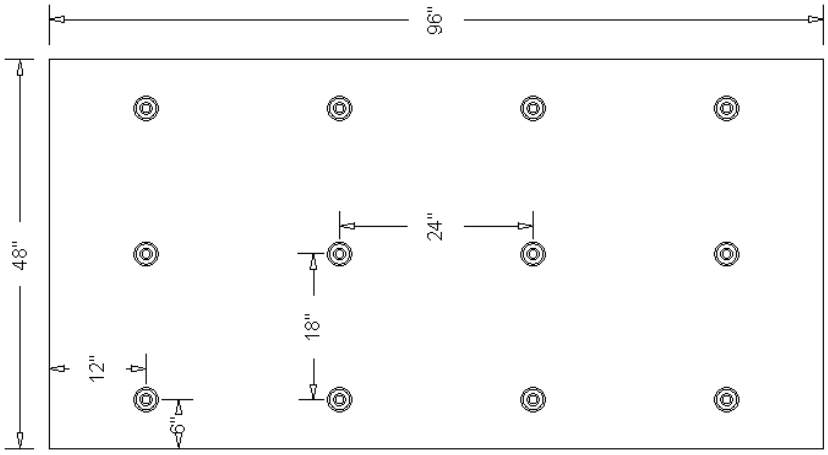 (Max. 2.67ft^2 contributory area per fastener)
12 per 4 ft. x 8 ft. Board (Alt. Pattern 2)	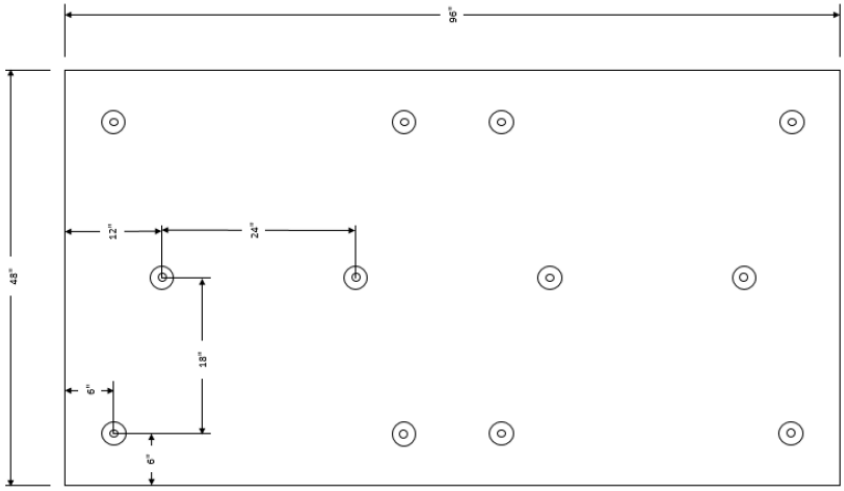 (Max. 2.67ft^2 contributory area per fastener)

This evaluation report is provided for State of Florida product approval under Rule 61G20-3. The manufacturer shall notify CREEK Technical Services, LLC of any product changes or quality assurance changes throughout the duration for which this report is valid. This evaluation report does not express nor imply warranty, installation, recommended use, or other product attributes that are not specifically addressed herein.

Insulation/Cover Board Fastening Patterns	
Description	Fastening Pattern
15 per 4 ft. x 8 ft. Board	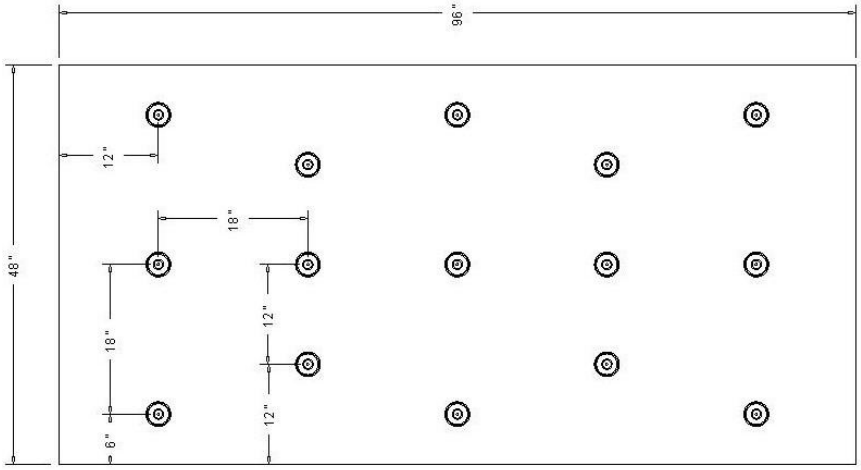 (Max. 2.13ft^2 contribuory area per fastener)
16 per 4 ft. x 8 ft. board	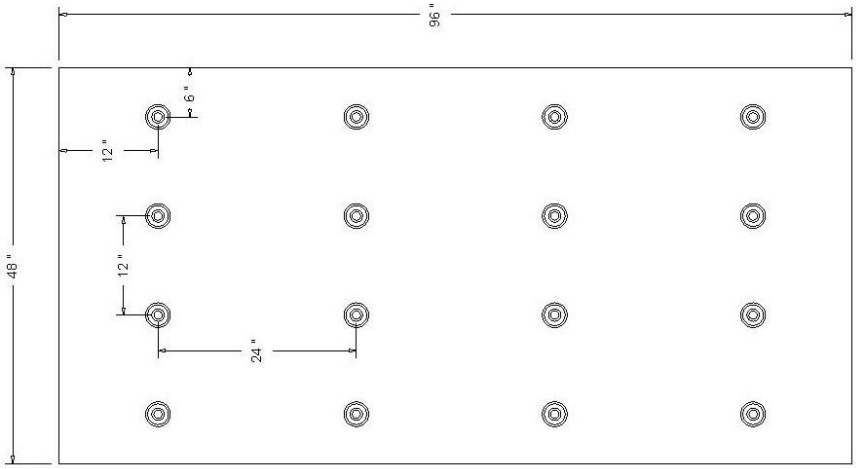 (Max. 2.00ft^2 contributory area per fastener)
18 per 4 ft. x 8 ft. board	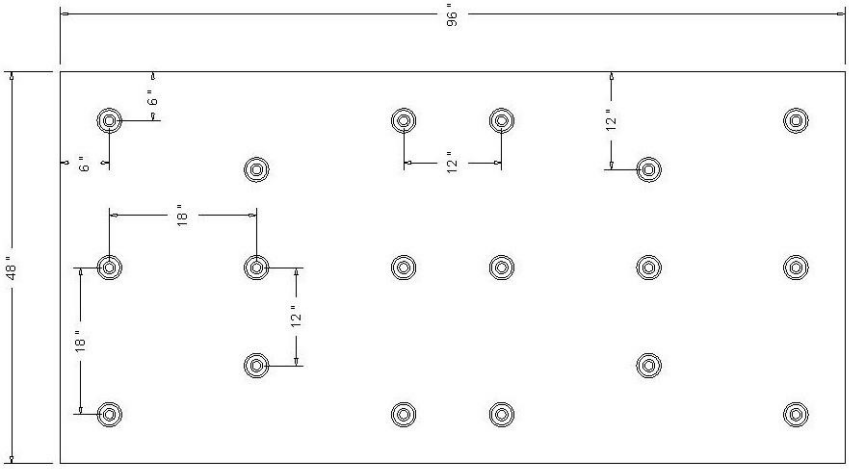 (Max. 1.78ft^2 contributory area per fastener)

This evaluation report is provided for State of Florida product approval under Rule 61G20-3. The manufacturer shall notify CREEK Technical Services, LLC of any product changes or quality assurance changes throughout the duration for which this report is valid. This evaluation report does not express nor imply warranty, installation, recommended use, or other product attributes that are not specifically addressed herein.

Insulation/Cover Board Fastening Patterns	
Description	Fastening Pattern
20 per 4 ft. x 8 ft. board	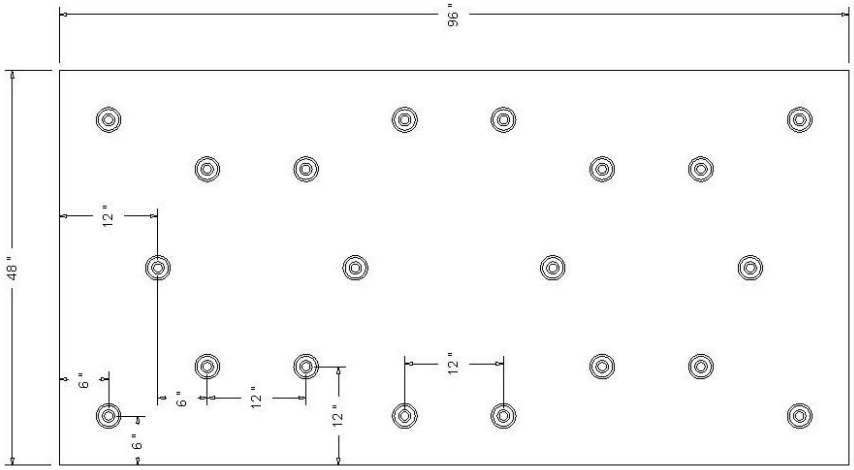 (Max. 1.60ft^2 contributory area per fastener)
20 per 4 ft. x 8 ft. board (Alt. Pattern)	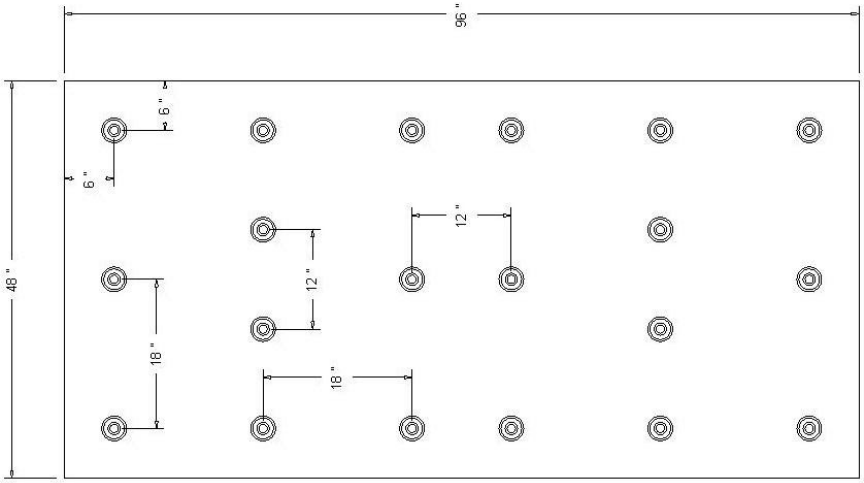 (Max. 1.60ft^2 contributory area per fastener)
22 per 4 ft. x 8 ft. board	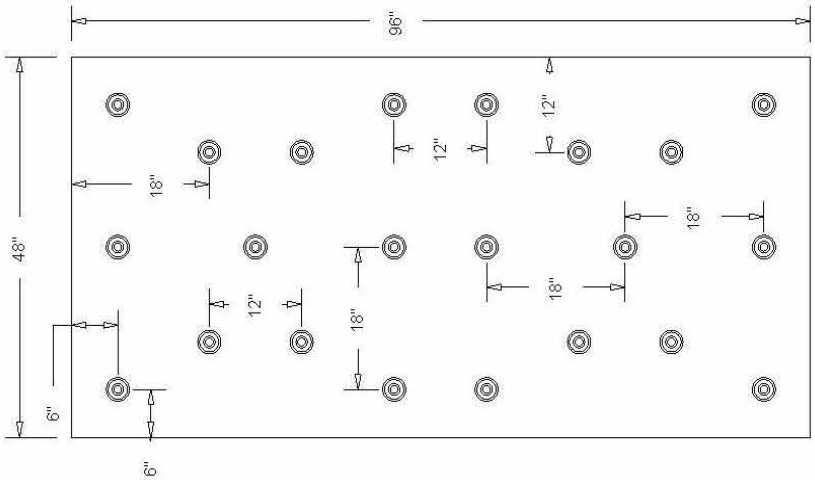 (Max. 1.45ft^2 contributory area per fastener)

This evaluation report is provided for State of Florida product approval under Rule 61G20-3. The manufacturer shall notify CREEK Technical Services, LLC of any product changes or quality assurance changes throughout the duration for which this report is valid. This evaluation report does not express nor imply warranty, installation, recommended use, or other product attributes that are not specifically addressed herein.

Insulation/Cover Board Fastening Patterns	
Description	Fastening Pattern
24 per 4 ft. x 8 ft. board	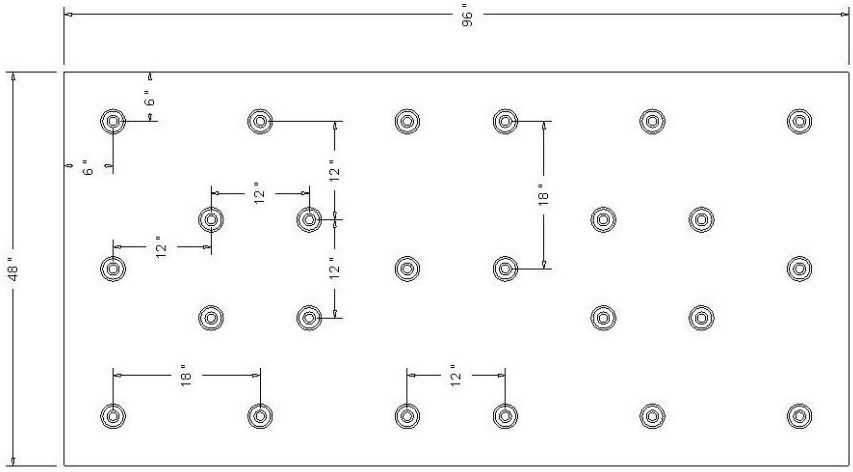 (Max. 1.33ft^2 contributory area per fastener)

VERSA-FAST Metal plate Fastening Pattern	
Description	**Fastening Pattern**
1 fastener per plate	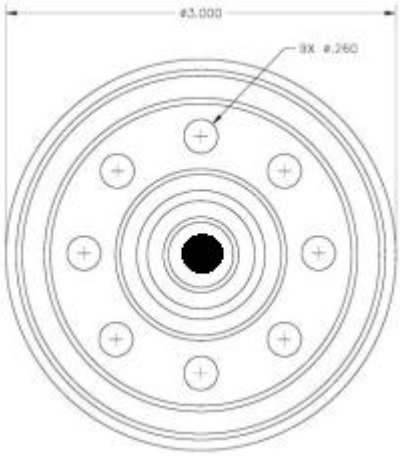
2 fasteners per plate	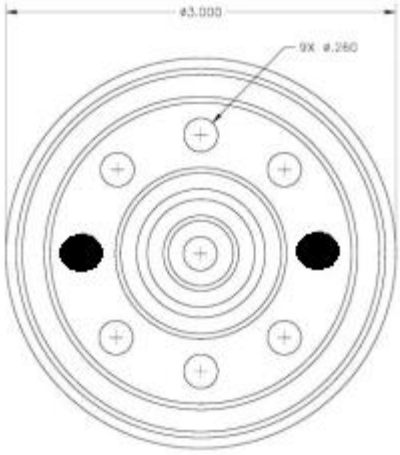

This evaluation report is provided for State of Florida product approval under Rule 61G20-3. The manufacturer shall notify CREEK Technical Services, LLC of any product changes or quality assurance changes throughout the duration for which this report is valid. This evaluation report does not express nor imply warranty, installation, recommended use, or other product attributes that are not specifically addressed herein.

NOMENCLATURE

The following naming conventions are utilized to specify products in the APPROVED ASSEMBLIES section of this report. Refer to the nomenclature below when deciphering the allowable products for use in the selected assembly. Installation requirements shall be as noted in the APPROVED ASSEMBLIES section of this report.

Name	Definition		
Air Barrier	Installation shall comply with Section C402.5 of the Florida Building Code, Energy Conservation, 6th Edition (2017)		
AP Fasteners & Plates	Elevate All-Purpose Fasteners or All-Purpose S Fasteners and Insulation Fastening Plates		
As Tested	Information provided to the report user based on the as tested condition of the roof system		
BASEGARD	One ply of BASEGARD SA. Shall only be used with membranes applied in hot asphalt.		
CD Fasteners & Insulation Plates	Elevate Concrete Drive and Insulation Fastening Plates		
CD Fasteners & Plates	Elevate Concrete Drive and Elevate HD Seam Plates		
Cover Board	One layer of any of the following products: -Georgia-Pacific DensDeck -Georgia-Pacific DensDeck Prime -Elevate ISOGARD HD -GenFlex HD ISO -USG SECUROCK Glass-Mat Roof Board -USG SECUROCK Gypsum-Fiber Roof Board		
Deck Detail	*As Tested* deck construction details are described as follows:		
	Concrete Deck	Min. f'_c = 2,500 psi at 28 days	
	CWF Deck	Min. 2.5-inch thick Tectum I cementitious wood fiber panels	
	Steel Deck	Min. 22 ga, Wide Rib Deck (Type WR) conforming to ANSI/SDI-RD1.0 & FBC; 0.5% Vented and ASTM A653 G90 for *LWIC* applications only. The following nomenclature is used to further describe the *As Tested* condition.	
		F<#>	<#> #12-24 HWH self-drilling screws or equivalent fastener at each flute used to secure the deck to the structural supports; Min. 0.25-inch penetration
		G<#>	Min. Grade <#> of *Steel Deck*
		HS<#>	Hilti S-SLC 01 M HWH screws or equivalent fastener secured <#>-inch o.c. along the panel side laps
		HXE<#>	<#> Hilti X-ENP 19 L 15 powder-driven fasteners or equivalent at each flute used to secure the deck to the structural supports; Min. 0.25-inch penetration
		HXH<#>	<#> Hilti X-HSN 24 powder-driven fasteners or equivalent at each flute used to secure the deck to the structural supports; Min. 0.25-inch penetration
		L<#>	Max. span of <#> ft.
		P	Min. 5/8-inch diameter puddle welds at each flute used to secure the deck to the structural supports
		PW	Min. 5/8-inch diameter puddle welds with weld washers at each flute used to secure the deck to the structural supports
		S<#>	1/4 ”-14 HWH x7/8” self-drilling screws or equivalent fastener secured <#>-inch o.c. along the panel side laps
		W	0.75-inch O.D. flat washer used with indicated fastener

This evaluation report is provided for State of Florida product approval under Rule 61G20-3. The manufacturer shall notify CREEK Technical Services, LLC of any product changes or quality assurance changes throughout the duration for which this report is valid. This evaluation report does not express nor imply warranty, installation, recommended use, or other product attributes that are not specifically addressed herein.

Name	Definition		
Deck Detail (Cont'd)	*Wood Deck*	Solid or closely fitted span rated sheathing at max. 24 in. span; The following nomenclature is used to further describe the *As Tested* condition.	
		T<#>P	Min. <#>-inch thickness of the plywood
		T<#>O	Min. <#>-inch thickness of the OSB
		L<#>	Max. span of <#> inches
		N<#1>/<#2>	Min. 0.113-inch diameter x 2-3/8-inch ring shank nails spaced <#1>-inch o.c. at all intermediate supports and spaced <#2> at the perimeter of each board
		WS<#1>/<#2>	Min. #8 x 2-inch wood screw spaced <#1>-inch o.c. at all intermediate supports and spaced <#2> at the perimeter of each board
DensDeck	Min. 0.25-inch Georgia-Pacific DensDeck		
DensDeck Prime	Min. 0.25-inch Georgia-Pacific DensDeck Prime		
HA	ASTM D 312, Type IV asphalt		
HD Fasteners & Insulation Plates	Elevate Heavy Duty Fasteners and Insulation Fastening Plates		
HD Fasteners & Plates	Elevate Heavy Duty Fasteners and Elevate HD Seam Plates		
HD Plus Fasteners & Plates	Elevate Heavy Duty Plus Fasteners and Elevate HD Plus Seam Plates		
Insulation	One of more layers in any combination of the following products: -Georgia-Pacific DensDeck -Georgia-Pacific DensDeck Prime -GenFlex ISO Insulation -GenFlex HD ISO -GenFlex HD Composite ISO -GenFlex Coated Glass Facer -Elevate ISO 95+ GL or ISOGARD GL -Elevate ISOGARD HD -Elevate ISOGARD HD Composite -Elevate RESISTA or ISOGARD CG -USG SECUROCK Glass-Mat Roof Board -USG SECUROCK Gypsum-Fiber Roof Board		
Insulation Adhesive	Adhered in accordance with one of the following options per INSTALLATION section: -Elevate I.S.O. Fix II -Elevate I.S.O. Stick -Elevate I.S.O. Twin Pack Insulation Adhesive		
Insulation Adhesive II	Adhered in accordance with one of the following options per INSTALLATION section: -Elevate I.S.O. Fix II -Elevate I.S.O. Stick -Elevate I.S.O. Twin Pack Insulation Adhesive -Elevate I.S.O. Spray R		
Insulation Adhesive III	Adhered in accordance with one of the following options per INSTALLATION section: -Elevate I.S.O. Fix II -Elevate I.S.O. Stick -Elevate I.S.O. Spray R		

This evaluation report is provided for State of Florida product approval under Rule 61G20-3. The manufacturer shall notify CREEK Technical Services, LLC of any product changes or quality assurance changes throughout the duration for which this report is valid. This evaluation report does not express nor imply warranty, installation, recommended use, or other product attributes that are not specifically addressed herein.

Name	Definition
Insulation Adhesive IV	Adhered in accordance with one of the following options per INSTALLATION section: -Elevate I.S.O. Twin Pack Insulation Adhesive -Elevate I.S.O. Spray R -Elevate Twin Jet
Insulation Adhesive VI	Adhered in accordance with one of the following options per INSTALLATION section: -Elevate I.S.O. Fix II -Elevate I.S.O. Stick -Elevate I.S.O. Twin Pack Insulation Adhesive -Elevate I.S.O. Spray R -Elevate Twin Jet
Insulation Adhesive VII	Adhered in accordance with one of the following options per INSTALLATION section: -Elevate I.S.O. Stick -Elevate I.S.O. Spray R -Elevate Twin Jet
Insulation Adhesive VIII	Adhered in accordance with one of the following options per INSTALLATION section: -Elevate I.S.O. Fix II -Elevate I.S.O. Stick -Elevate I.S.O. Spray R -Elevate Twin Jet
Insulation Adhesive IX	Adhered in accordance with one of the following options per INSTALLATION section: -Elevate I.S.O. Fix II -Elevate I.S.O. Spray R -Elevate Twin Jet
Insulation Adhesive X	Adhered in accordance with one of the following options per INSTALLATION section: -Elevate I.S.O. Stick -Elevate I.S.O. Twin Pack Insulation Adhesive -Elevate I.S.O. Spray R -Elevate Twin Jet
InvisiWeld	Elevate UltraPly InvisiWeld Plates or Invisiweld-S Plates with Heavy Duty Fasteners or Concrete Drive fasteners (concrete decks only)
Invisiweld-S	Elevate UltraPly Invisiweld-S Plates with SFS Inteck Dekfast #15 HS, Elevate Heavy Duty Fasteners or Elevate Concrete Drive fasteners (concrete decks only)
Invisiweld-S II	Elevate UltraPly Invisiweld-S Plates with SFS Inteck Dekfast #15 HS Fasteners or Dekfast #14 Fasteners (concrete decks only)
ISO	One or more layers of GenFlex ISO Insulation, Elevate ISO 95+ GL, or Elevate ISOGARD GL; Elevate ISOGARD GL shall be minimum 2.0-inch thickness when mechanically fastened in roof assemblies with adhered membranes
ISO HD	One or more layers of GenFlex HD ISO or Elevate ISOGARD HD
ISO HD-C	One or more layers of GenFlex HD Composite ISO or Elevate ISOGARD HD Composite
ISO CG	One or more layers of GenFlex Coated Glass Facer, Elevate RESISTA, or Elevate ISOGARD CG; Elevate ISOGARD CG shall be minimum 2.0-inch thickness when mechanically fastened in roof assemblies with adhered membranes
JBSA	Elevate Jet Bond Spray Adhesive
LWIC	Poured-in-place Cellular Lightweight Insulating Concrete with encapsulated insulation board
MA Base	One ply of Channel Venting Base, MB Base, SBS Base, SBS Base-P, SBS Glass Torch Base, SBS Glass Torch Base 1.5, SBS Premium Base, SBS Poly Base, SBS Premium Poly Base, SBS Poly Torch Base, or SBS Smooth mechanically attached as prescribed per the approved assembly

This evaluation report is provided for State of Florida product approval under Rule 61G20-3. The manufacturer shall notify CREEK Technical Services, LLC of any product changes or quality assurance changes throughout the duration for which this report is valid. This evaluation report does not express nor imply warranty, installation, recommended use, or other product attributes that are not specifically addressed herein.

Name	Definition
Membrane Adhesive I	Fully adhered in accordance with one of the following options per INSTALLATION section: -Elevate UltraPly Bonding Adhesive -Elevate Single-Ply LVOC Bonding Adhesive -Elevate Single-Ply LVOC 1168 Bonding Adhesive
Membrane Adhesive II	Fully adhered in accordance with one of the following options per INSTALLATION section: -Elevate UltraPly Bonding Adhesive -Elevate Single-Ply LVOC Bonding Adhesive -Elevate Single-Ply LVOC 1168 Bonding Adhesive -Elevate Water Based Bonding Adhesive P
Membrane Adhesive III	Fully adhered in accordance with one of the following options per INSTALLATION section: -Elevate Single-Ply LVOC Bonding Adhesive -Elevate Single-Ply LVOC 1168 Bonding Adhesive -Elevate Water Based Bonding Adhesive P
Membrane Adhesive IV	Fully adhered in accordance with one of the following options per INSTALLATION section: -Elevate UltraPly Bonding Adhesive -Elevate Jet Bond Spray Adhesive -Elevate Single-Ply LVOC Bonding Adhesive -Elevate Single-Ply LVOC 1168 Bonding Adhesive
Membrane Adhesive V	Fully adhered in accordance with one of the following options per INSTALLATION section: -Elevate UltraPly Bonding Adhesive -Elevate Jet Bond Spray Adhesive -Elevate Single-Ply LVOC Bonding Adhesive -Elevate Single-Ply LVOC 1168 Bonding Adhesive -Elevate Water Based Bonding Adhesive P
MCRF	Minimum Characteristic Resistance Force as determined by TAS 105 for the named fastener in the selected assembly
MDP	Maximum Design Pressure
PermaMop	Owens Corning PermaMop Asphalt
Preliminarily Secured	Fastened at minimum rate of 5 per 4 ft. x 8 ft. board or 4 per 4 ft. x 4 ft. board.
Recover	Where assemblies are used to recover an existing roof, the existing roof shall consist of only one layer of roofing, i.e. recovering a previously recovered roof is not permitted. Recover roofing shall be conducted in compliance with FBC Section 1511 outside of the HVHZ and FBC Section 1521 within the HVHZ. For mechanically fastened roof assemblies, the existing roof insulation thickness may be contributory in meeting the minimum insulation thickness requirements for a given assembly.
SBS TA	SBS Glass Torch Base fully bonded by torch adhering.
SECUROCK	Min. 0.25-inch USG SECUROCK Gypsum-Fiber Roof Board
TJ-S	Twin Jet applied in spatter
TJ-R	Twin Jet applied in ribbons
UltraPly TPO	One ply of any one of the following products: 45-mil thick, 60-mil thick, or 80-mil thick UltraPly TPO
UltraPly TPO FA	One ply of UltraPly TPO Flex Adhered
UltraPly TPO FSA	One ply of any one of the following products: 60-mil thick UltraPly TPO Flex SA
UltraPly TPO SA (HVHZ ONLY)	For use in the HVHZ only. One ply of any one of the following products: 60-mil thick UltraPly TPO SA

This evaluation report is provided for State of Florida product approval under Rule 61G20-3. The manufacturer shall notify CREEK Technical Services, LLC of any product changes or quality assurance changes throughout the duration for which this report is valid. This evaluation report does not express nor imply warranty, installation, recommended use, or other product attributes that are not specifically addressed herein.

Name	Definition
UltraPly TPO XR	One ply of any one of the following products: UltraPly TPO XR 100, UltraPly TPO XR 115 or UltraPly XR 135
XR-BA	XR Bonding Adhesive
XR-S	XR Stick Membrane Adhesive
VB	One or more plies of the following applied as a vapor barrier: - Elevate Ply IV (4) - Elevate Ply VI (6) - Elevate MB Base - Elevate SBS Base - Elevate SBS PolyBase - Elevate SBS Premium Base
VERSA-FAST	Trufast VERSA-FAST Plates and VERSA-FAST Fasteners
V-Force	One ply of Elevate V-Force Vapor Barrier Membrane self-adhered fully over deck. Non-metal substrates must be primed with Elevate SA-Solvent Based (SB) Primer or Elevate SA-LVOC Primer
WB V-Force	One ply of Elevate V-Force Vapor Barrier Membrane self-adhered fully over deck primed with V-Force WB Primer

This evaluation report is provided for State of Florida product approval under Rule 61G20-3. The manufacturer shall notify CREEK Technical Services, LLC of any product changes or quality assurance changes throughout the duration for which this report is valid. This evaluation report does not express nor imply warranty, installation, recommended use, or other product attributes that are not specifically addressed herein.

APPROVED ASSEMBLIES

The following notes shall be observed when using the assembly tables below.

1. Allowable pressures were calculated using a 2:1 margin of safety per FBC Section 1504.9 and 1523.4. *MDP* shall be minimum -45 psf for use in the HVHZ.
2. Refer to LIMITATIONS and NOMENCLATURE sections of this evaluation when using the table(s) below. Items *italicized* refer to specific nomenclature used in this report.
3. Refer to INSTALLATION section of this report for installation detail when the information is not explicitly stated for the selected assembly.
4. The on-center (o.c.) spacing given is the maximum allowable attachment spacing for the rated system.
5. *As Tested* information for roof deck construction is provided for information only. The addition of the *As Tested* deck information does not obviate the requirement for rational design of the roof deck and roof deck attachment in accordance with FBC requirements.
6. Prior to application of the approved assembly an optional vapor barrier, such as 4-6 mil polyethylene, *V-Force*, or *DensDeck Prime* with *V-Force,* may be installed over concrete or steel decks when the approved assembly contains insulation or the membrane fastened through to the deck.
7. Steel deck utilized in System Nos. S-A-# shall be ASTM A653, G90 galvanized steel.

Assembly System Numbers and Definitions	
C-A-#	Assemblies with All Layers Adhered over *Concrete Deck* (New or Existing)
C-AM-#	Assemblies with Adhered Membranes over Insulated *Concrete Deck* (New, Existing or *Recover*)
C-M-#	Mechanically Fastened Assemblies over *Concrete Deck* (New or Existing)
C-W-#	Induction Welded Assemblies over *Concrete Deck* (New or Existing)
CW-A-#	Assemblies with All Layers Adhered over Cementitious Wood Fiber Deck (New or Existing)
CW-AM-#	Assemblies with Adhered Membranes over Cementitious Wood Fiber Deck (New, Existing, or *Recover*)
G-A-#	Assemblies with All Layers Adhered over Gypsum Deck (New or Existing)
G-AM-#	Gypsum Deck Assemblies with Adhered Membranes (New or Existing)
LC-A-#	Lightweight Concrete Assemblies with All Layers Adhered over *Concrete Deck* (New or Existing)
LS-A-#	Lightweight Concrete Assemblies with All Layers Adhered over *Steel Deck* (New or Existing)
L-AM-#	Lightweight Concrete Assemblies with Adhered Membranes over *Steel Deck* or *Concrete Deck* (New or Existing)
L-M-#	Mechanically Fastened Lightweight Concrete Assemblies over *Steel Deck* or *Concrete Deck* (New or Existing)
R-A-#	*Recover* Assemblies with All Layers Adhered
R-AM-#	*Recover* Assemblies with Adhered Membranes
R-M-#	Mechanically Fastened *Recover* Assemblies
R-W-#	Induction Welded *Recover* Assemblies
S-A-#	Assemblies with All Layers Adhered over *Steel Deck* (New or Existing)
S-AM-#	Assemblies with Adhered Membranes over Insulated *Steel Deck* (New, Existing or *Recover*)
S-M-#	Mechanically Fastened Assemblies over *Steel Deck* (New or Existing)
S-W-#	Induction Welded Assemblies over *Steel Deck* (New or Existing)
W-A-#	Assemblies with All Layers Adhered over *Wood Deck* (New or Existing)
W-AM-#	Assemblies with Adhered Membranes over Insulated *Wood Deck* (New, Existing or *Recover*)
W-M-#	Mechanically Fastened Assemblies over *Wood Deck* (New or Existing)
W-W-#	Induction Welded Assemblies over *Wood Deck* (New or Existing)

This evaluation report is provided for State of Florida product approval under Rule 61G20-3. The manufacturer shall notify CREEK Technical Services, LLC of any product changes or quality assurance changes throughout the duration for which this report is valid. This evaluation report does not express nor imply warranty, installation, recommended use, or other product attributes that are not specifically addressed herein.

Assemblies with All Layers Adhered over *Concrete Deck* (New or Existing)						
System No.	Vapor Barrier	Base Insulation	Top Insulation	Membrane	Membrane Attachment	*MDP* (psf)
C-A-1	*WB V-Force*	Min. 1.5-inch *ISO* Adhered in I.S.O. Stick Ribbons spaced 12-inch o.c.	-	*UltraPly TPO*	*Membrane Adhesive V*	**-57.5 (Lim. 9)**
				UltraPly TPO FA	*Membrane Adhesive IV*	
				UltraPly TPO SA (HVHZ ONLY)	Self-adhered	
				UltraPly TPO FSA	Self-adhered	
				UltraPly TPO XR	*XR-S, TJ-R, or* I.S.O. Spray R ribbon adhered 12-inch o.c.; *TJ-S* or *JBSA*	
C-A-2	*WB V-Force*	Min. 1.5-inch *ISO* Adhered in *Insulation Adhesive IV* ribbon adhered 12-inch o.c.	-	*UltraPly TPO*	*Membrane Adhesive V*	**-97.5 (Lim. 9)**
				UltraPly TPO FA	*Membrane Adhesive IV*	
				UltraPly TPO SA (HVHZ ONLY)	Self-adhered	
				UltraPly TPO FSA	Self-adhered	
				UltraPly TPO XR	*XR-S, TJ-R, or* I.S.O. Spray R ribbon adhered 12-inch o.c.; *TJ-S* or *JBSA*	
C-A-3	APP 80 Glass Base torched adhered	Min. 0.5-inch *ISO* or Min. 1-inch *ISO CG* installed with I.S.O. Twin Pack applied in ribbons spaced 12-inch o.c	*SECUROCK* installed with I.S.O. Twin Pack applied in ribbons spaced 12-inch o.c	*UltraPly TPO*	*Membrane Adhesive V*	**-112.5 (Lim. 9)**
				UltraPly TPO FA	*Membrane Adhesive IV*	
				UltraPly TPO SA (HVHZ ONLY)	Self-adhered	
				UltraPly TPO FSA	Self-adhered	
				UltraPly TPO XR	*XR-S, TJ-R,* or I.S.O. Spray R ribbon adhered 12-inch o.c.; *HA, PermaMop, XR-BA, TJ-S,* or *JBSA*	

This evaluation report is provided for State of Florida product approval under Rule 61G20-3. The manufacturer shall notify CREEK Technical Services, LLC of any product changes or quality assurance changes throughout the duration for which this report is valid. This evaluation report does not express nor imply warranty, installation, recommended use, or other product attributes that are not specifically addressed herein.

Assemblies with All Layers Adhered over *Concrete Deck* (New or Existing)						
System No.	Vapor Barrier	Base Insulation	Top Insulation	Membrane	Membrane Attachment	*MDP* (psf)
C-A-4	-	Min. 0.5-inch *ISO* or Min. 1-inch *ISO CG* installed with I.S.O. Stick applied in ribbons spaced 12-inch o.c	*SECUROCK* installed with I.S.O. Stick applied in ribbons spaced 12-inch o.c	*UltraPly TPO*	*Membrane Adhesive V*	**-112.5 (Lim. 9)**
				UltraPly TPO FA	*Membrane Adhesive IV*	
				UltraPly TPO SA (HVHZ ONLY)	Self-adhered	
				UltraPly TPO FSA	Self-adhered	
				UltraPly TPO XR	*XR-S, TJ-R,* or I.S.O. Spray R ribbon adhered 12-inch o.c.; *HA, PermaMop, XR-BA, TJ-S,* or *JBSA*	
C-A-5	OPTIONAL APP 80 Glass Base torched adhered	Min. 0.5-inch *ISO* or Min. 1-inch *ISO CG* installed with I.S.O. Twin Pack applied in ribbons spaced 12-inch o.c	*DensDeck* installed with I.S.O. Twin Pack applied in ribbons spaced 12-inch o.c	*UltraPly TPO* or *UltraPly TPO FA*	Single Ply LVOC Bonding Adhesive	**-112.5 (Lim. 9)**
				UltraPly TPO FSA	Self-Adhered	
C-A-6	-	Min. 0.5-inch *ISO* or Min. 1-inch *ISO CG* installed with I.S.O. Stick applied in ribbons spaced 12-inch o.c	*DensDeck* installed with I.S.O. Stick applied in ribbons spaced 12-inch o.c	*UltraPly TPO* or *UltraPly TPO FA*	Single Ply LVOC Bonding Adhesive	**-112.5 (Lim. 9)**
				UltraPly TPO FSA	Self-Adhered	
C-A-7	-	Min. 1.5-inch *ISO* with I.S.O. Stick applied in ribbons spaced 4-inch o.c	-	*UltraPly TPO FSA*	Self-Adhered	**-127.5 (Lim. 9)**
C-A-8	APP 80 Glass Base torched adhered	Min. 0.5-inch *ISO* or Min. 1-inch *ISO CG* installed with I.S.O. Twin Pack applied in ribbons spaced 12-inch o.c	Min 0.5-inch *ISO HD* installed with I.S.O. Twin Pack applied in ribbons spaced 12-inch o.c	*UltraPly TPO*	*Membrane Adhesive V*	**-135 (Lim. 9)**
				UltraPly TPO FA	*Membrane Adhesive IV*	
C-A-9	APP 80 Glass Base torched adhered	Min. 1.5-inch *ISO* or *ISO CG*; I.S.O. Twin Pack ribbon adhered 12-inch o.c.	OPTIONAL Min. 1.5-inch *ISO* or *ISO CG* with Taper *ISO* or *ISO CG* I.S.O. Twin Pack or I.S.O. Spray R ribbon adhered 12-inch o.c.	*UltraPly TPO XR*	*JBSA;* *XR-S* ribbon adhered 12-inch o.c.; or *TJ-S* over *ISO CG* only	**-142.5 (Lim. 9)**
C-A-10	-	*ISO* *Insulation Adhesive VI* ribbon adhered 12-inch o.c.	-	*UltraPly TPO SA (HVHZ ONLY)*	Self-adhered	**-150 (Lim. 9)**
C-A-11	*WB V-Force*	*ISO* Twin Jet ribbon adhered 12-inch o.c.	*DensDeck Prime* Twin Jet ribbon adhered 12-inch o.c.	*UltraPly TPO*	*Membrane Adhesive V*	**-150 (Lim. 9)**
				UltraPly TPO FA	*Membrane Adhesive IV*	
				UltraPly TPO SA (HVHZ ONLY)	Self-adhered	
				UltraPly TPO XR	*XR-S, TJ-R,* or I.S.O. Spray R ribbon adhered 12-inch o.c.; *HA, PermaMop, XR-BA, TJ-S,* or *JBSA*	

This evaluation report is provided for State of Florida product approval under Rule 61G20-3. The manufacturer shall notify CREEK Technical Services, LLC of any product changes or quality assurance changes throughout the duration for which this report is valid. This evaluation report does not express nor imply warranty, installation, recommended use, or other product attributes that are not specifically addressed herein.

Assemblies with All Layers Adhered over *Concrete Deck* (New or Existing)						
System No.	Vapor Barrier	Base Insulation	Top Insulation	Membrane	Membrane Attachment	*MDP* (psf)
C-A-12	-	*ISO Insulation Adhesive VI* ribbon adhered 12-inch o.c.	-	*UltraPly TPO XR*	*XR-S* or I.S.O. Spray R ribbon adhered 12-inch o.c.; or *JBSA*	**-155.5 (Lim. 9)**
C-A-13	-	OPTIONAL *ISO Insulation Adhesive VI* ribbon adhered 12-inch o.c.	*DensDeck Prime Insulation Adhesive VI* ribbon adhered 12-inch o.c.	*UltraPly TPO*	*Membrane Adhesive V*	**-163.5 (Lim. 9)**
				UltraPly TPO FA	*Membrane Adhesive IV*	
				UltraPly TPO SA (HVHZ ONLY)	Self-adhered	
				UltraPly TPO XR	*XR-S, TJ-R,* or I.S.O. Spray R ribbon adhered 12-inch o.c.; *HA, PermaMop, XR-BA, TJ-S,* or *JBSA*	
C-A-14	*WB V-Force*	*ISO* I.S.O. Spray R ribbon adhered 12-inch o.c.	*DensDeck Prime* I.S.O. Spray R ribbon adhered 12-inch o.c.	*UltraPly TPO*	*Membrane Adhesive V*	**-163.5 (Lim. 9)**
				UltraPly TPO FA	*Membrane Adhesive IV*	
				UltraPly TPO SA (HVHZ ONLY)	Self-adhered	
				UltraPly TPO XR	*XR-S, TJ-R,* or I.S.O. Spray R ribbon adhered 12-inch o.c.; *HA, PermaMop, XR-BA, TJ-S,* or *JBSA*	
C-A-15	-	*ISO Insulation Adhesive VI* ribbon adhered 12-inch o.c.	*SECUROCK Insulation Adhesive VII* ribbon adhered 12-inch o.c.	*UltraPly TPO*	*Membrane Adhesive V*	**-175 (Lim. 9)**
				UltraPly TPO FA	*Membrane Adhesive IV*	
				UltraPly TPO XR	*XR-S, TJ-R,* or I.S.O. Spray R ribbon adhered 12-inch o.c.; *HA, PermaMop, XR-BA, TJ-S,* or *JBSA*	
C-A-16	-	*ISO Insulation Adhesive VI* ribbon adhered 12-inch o.c.	*ISO HD Insulation Adhesive VIII* ribbon adhered 12-inch o.c.	*UltraPly TPO*	*Membrane Adhesive II*	**-180 (Lim. 9)**
				UltraPly TPO FA	*Membrane Adhesive I*	
				UltraPly TPO SA (HVHZ ONLY)	Self-adhered	
				UltraPly TPO XR	*XR-S, TJ-R, or* I.S.O. Spray R ribbon adhered 12-inch o.c.; *TJ-S* or *JBSA*	

This evaluation report is provided for State of Florida product approval under Rule 61G20-3. The manufacturer shall notify CREEK Technical Services, LLC of any product changes or quality assurance changes throughout the duration for which this report is valid. This evaluation report does not express nor imply warranty, installation, recommended use, or other product attributes that are not specifically addressed herein.

Assemblies with All Layers Adhered over *Concrete Deck* (New or Existing)						
System No.	Vapor Barrier	Base Insulation	Top Insulation	Membrane	Membrane Attachment	*MDP* (psf)
C-A-17	-	Min. 1.5-inch *ISO* or *ISO CG* installed with Twin Jet or I.S.O. Stick applied in ribbons spaced 12-inch o.c	-	*UltraPly TPO* or *UltraPly TPO FA*	*Membrane Adhesive V*	**-187.5 (Lim. 9)**
				UltraPly TPO SA (HVHZ ONLY)	Self-adhered	
				UltraPly TPO XR	*XR-S* or I.S.O. Spray R ribbon adhered 12-inch o.c.; *JBSA*	
C-A-18	-	Min. 0.5-inch *ISO* or Min. 1-inch *ISO CG* installed with I.S.O. Stick applied in ribbons spaced 12-inch o.c	*DensDeck* installed with I.S.O. Stick applied in ribbons spaced 12-inch o.c	*UltraPly TPO* or *UltraPly TPO FA*	UltraPly Bonding Adhesive or *JBSA*	**-187.5 (Lim. 9)**
C-A-19	-	Min. 0.5-inch *ISO* or Min. 1-inch *ISO CG* installed with I.S.O. Stick applied in ribbons spaced 12-inch o.c	OPTIONAL *ISO HD* installed with I.S.O. Stick applied in ribbons spaced12-inch o.c	*UltraPly TPO*	*Membrane Adhesive II*	**-187.5 (Lim. 9)**
				UltraPly TPO FA	*Membrane Adhesive I*	
				UltraPly TPO SA (HVHZ ONLY)	Self-adhered	
				UltraPly TPO XR	*XR-S* or I.S.O. Spray R ribbon adhered 12-inch o.c.; *JBSA*	
C-A-20	-	Min. 0.5-inch *ISO* or Min. 1-inch *ISO CG* installed with I.S.O. Stick applied in ribbons spaced 12-inch o.c	Min. 7/16-inch OSB installed with I.S.O. Stick applied in ribbons spaced 12-inch o.c	*UltraPly TPO*	*Membrane Adhesive II*	**-187.5 (Lim. 9; Non-HVHZ)**
				UltraPly TPO FA	*Membrane Adhesive I*	
C-A-21	-	*ISO Insulation Adhesive VI* ribbon adhered 12-inch o.c.	*ISO HD Insulation Adhesive III* ribbon adhered 12-inch o.c.	*UltraPly TPO*	*Membrane Adhesive II*	**-195 (Lim. 9)**
				UltraPly TPO FA	*Membrane Adhesive I*	
				UltraPly TPO SA (HVHZ ONLY)	Self-adhered	
				UltraPly TPO XR	*XR-S or* I.S.O. Spray R ribbon adhered 12-inch o.c.; *JBSA*	
C-A-22	-	Min. 0.5-inch *ISO* installed with Twin Jet applied in ribbons spaced 12-inch o.c.	*SECUROCK* installed with Twin Jet applied in ribbons spaced 12-inch o.c.	*UltraPly TPO*	*Membrane Adhesive V*	**-195 (Lim. 9)**
				UltraPly TPO FA	*Membrane Adhesive IV*	
				UltraPly TPO SA (HVHZ ONLY)	Self-adhered	
				UltraPly TPO XR	*XR-S* ribbon adhered 12-inch o.c.; *PermaMop; JBSA* or *TJ-S*	

This evaluation report is provided for State of Florida product approval under Rule 61G20-3. The manufacturer shall notify CREEK Technical Services, LLC of any product changes or quality assurance changes throughout the duration for which this report is valid. This evaluation report does not express nor imply warranty, installation, recommended use, or other product attributes that are not specifically addressed herein.

Assemblies with All Layers Adhered over *Concrete Deck* (New or Existing)						
System No.	Vapor Barrier	Base Insulation	Top Insulation	Membrane	Membrane Attachment	*MDP* (psf)
C-A-23	-	Min. 1.5-inch *ISO*; Twin Jet ribbon adhered 12-inch o.c.	*DensDeck Prime;* Twin Jet ribbon adhered 12-inch o.c.	*UltraPly TPO*	*Membrane Adhesive V*	**-195 (Lim. 9)**
				UltraPly TPO FA	*Membrane Adhesive IV*	
				UltraPly TPO SA (HVHZ ONLY)	Self-adhered	
				UltraPly TPO XR	*XR-S* or I.S.O. Spray R ribbon adhered 12-inch o.c.; *HA; PermaMop; XR-BA; JBSA,*or *TJ-S*	
C-A-24	-	-	-	*UltraPly TPO* or *UltraPly TPO FA*	*Membrane Adhesive I*	**-205 (Lim. 9)**
				UltraPly TPO SA (HVHZ ONLY)	Self-adhered	
C-A-25	-	Min. 1.5-inch *ISO*; I.S.O. Spray R ribbon adhered 12-inch o.c.	*DensDeck Prime;* I.S.O. Spray R ribbon adhered 12-inch o.c.	*UltraPly TPO*	*Membrane Adhesive V*	**-205 (Lim. 9)**
				UltraPly TPO FA	*Membrane Adhesive IV*	
				UltraPly TPO SA (HVHZ ONLY)	Self-adhered	
				UltraPly TPO XR	*XR-S* or I.S.O. Spray R ribbon adhered 12-inch o.c.; *HA; PermaMop; XR-BA*	
C-A-26	*V-Force*	Tapered *ISO* installed with I.S.O. Stick applied in ribbons spaced 12-inch o.c.	*DensDeck Prime* installed with I.S.O. Stick applied in ribbons spaced 12-inch o.c.	*UltraPly TPO*	*Membrane Adhesive V*	**-205 (Lim. 9)**
				UltraPly TPO FA	*Membrane Adhesive IV*	
				UltraPly TPO SA (HVHZ ONLY)	Self-adhered	
				UltraPly TPO XR	*XR-S or* I.S.O. Spray R ribbon adhered 12-inch o.c.	
C-A-27	APP 80 Glass Base torched adhered	Min. 0.5-inch *ISO* or Min. 1-inch *ISO CG* installed with I.S.O. Twin Pack applied in ribbons spaced 12-inch o.c	Min 0.5-inch *ISO HD* installed with I.S.O. Twin Pack applied in ribbons spaced 12-inch o.c	*UltraPly TPO* or *UltraPly TPO FA*	*Membrane Adhesive I*	**-225 (Lim. 9)**
C-A-28	OPTIONAL *V-Force*	Min. 0.5-inch *ISO*; I.S.O. Twin Pack Insulation Adhesive, I.S.O. Stick, or Twin Jet applied in ribbons spaced12-inch o.c.	Min. 1-inch *ISO*; I.S.O. Stick or Twin Jet adhered 12-inch o.c.	*UltraPly TPO*	*Membrane Adhesive V*	**-240 (Lim. 9)**
				UltraPly TPO FA	*Membrane Adhesive IV*	
				UltraPly TPO SA (HVHZ ONLY)	Self-adhered	
				UltraPly TPO XR	*XR-S or* I.S.O. Spray R ribbon adhered 12-inch o.c.; or *JBSA*	

This evaluation report is provided for State of Florida product approval under Rule 61G20-3. The manufacturer shall notify CREEK Technical Services, LLC of any product changes or quality assurance changes throughout the duration for which this report is valid. This evaluation report does not express nor imply warranty, installation, recommended use, or other product attributes that are not specifically addressed herein.

Assemblies with All Layers Adhered over *Concrete Deck* (New or Existing)						
System No.	Vapor Barrier	Base Insulation	Top Insulation	Membrane	Membrane Attachment	*MDP* (psf)
C-A-29	OPTIONAL APP 80 Glass Base torched adhered	Min. 0.5-inch *ISO* or Min. 1-inch *ISO CG* installed with I.S.O. Twin Pack applied in ribbons spaced 12-inch o.c	*DensDeck* installed with I.S.O. Twin Pack applied in ribbons spaced 12-inch o.c	*UltraPly TPO* or *UltraPly TPO FA*	UltraPly Bonding Adhesive or *JBSA*	**-247.5 (Lim. 9)**
C-A-30	OPTIONAL APP 80 Glass Base torched adhered	Min. 0.5-inch *ISO* or Min. 1-inch *ISO CG* installed with I.S.O. Twin Pack applied in ribbons spaced 12-inch o.c	OPTIONAL *DensDeck Prime* installed with I.S.O. Twin Pack applied in ribbons spaced 12-inch o.c	*UltraPly TPO*	*Membrane Adhesive V*	**-247.5 (Lim. 9)**
				UltraPly TPO FA	*Membrane Adhesive IV*	
C-A-31	APP 80 Glass Base torched adhered	Min. 0.5-inch *ISO* or Min. 1-inch *ISO CG* installed with I.S.O. Twin Pack applied in ribbons spaced 12-inch o.c	OPTIONAL *DensDeck Prime* installed with I.S.O. Twin Pack applied in ribbons spaced 12-inch o.c	*UltraPly TPO SA (HVHZ ONLY)*	Self-adhered	**-247.5 (Lim. 9)**
C-A-32	-	Min. 0.5-inch *ISO* or Min. 1-inch *ISO CG* installed with I.S.O. Twin Pack applied in ribbons spaced 12-inch o.c	OPTIONAL Min. 7/16-inch OSB installed with I.S.O. Twin Pack applied in ribbons spaced 12-inch o.c	*UltraPly TPO*	*Membrane Adhesive II*	**-247.5 (Lim. 9; Non-HVHZ)**
				UltraPly TPO FA	*Membrane Adhesive I*	
C-A-33	OPTIONAL *V-Force* or 1-2 ply of Ply IV or VI in hot asphalt or APP 80 Glass Base, SBS Glass FR Torch, or SBS Poly Torch Base torch adhered	Min. 0.5-inch *ISO* installed with I.S.O. Twin Pack or I.S.O. Spray R applied in ribbons spaced 12-inch o.c.	-	*UltraPly TPO*	*Membrane Adhesive V*	**-255 (Lim. 9)**
				UltraPly TPO FA	*Membrane Adhesive IV*	
				UltraPly TPO SA (HVHZ ONLY)	Self-adhered	
				UltraPly TPO XR	*XR-S* or I.S.O. Spray R ribbon adhered 12-inch o.c. or *JBSA*	
C-A-34	OPTIONAL *V-Force*	Min. 1.5-inch *ISO*; I.S.O. Twin Pack Insulation Adhesive or I.S.O. Stick applied in ribbons spaced12-inch o.c.	OPTIONAL Min. 1-inch *ISO*; I.S.O. Stick adhered 12-inch o.c.	*UltraPly TPO*	*Membrane Adhesive V*	**-255 (Lim. 9)**
				UltraPly TPO FA	*Membrane Adhesive IV*	
				UltraPly TPO SA (HVHZ ONLY)	Self-adhered	
				UltraPly TPO XR	*XR-S or* I.S.O. Spray R ribbon adhered 12-inch o.c.; or *JBSA*	
C-A-35	*V-Force*	Tapered *ISO* installed with I.S.O. Stick applied in ribbons spaced 12-inch o.c.	*ISO HD* installed with I.S.O. Stick applied in ribbons spaced12-inch o.c.	*UltraPly TPO*	*Membrane Adhesive II*	**-262.5 (Lim. 9)**
				UltraPly TPO FA	*Membrane Adhesive I*	
				UltraPly TPO SA (HVHZ ONLY)	Self-adhered	
				UltraPly TPO XR	*XR-S or* I.S.O. Spray R ribbon adhered 12-inch o.c. or *JBSA*	

This evaluation report is provided for State of Florida product approval under Rule 61G20-3. The manufacturer shall notify CREEK Technical Services, LLC of any product changes or quality assurance changes throughout the duration for which this report is valid. This evaluation report does not express nor imply warranty, installation, recommended use, or other product attributes that are not specifically addressed herein.

Assemblies with All Layers Adhered over *Concrete Deck* (New or Existing)						
System No.	Vapor Barrier	Base Insulation	Top Insulation	Membrane	Membrane Attachment	*MDP* (psf)
C-A-36	OPTIONAL *V-Force* or 1-2 ply of Ply IV or VI in hot asphalt or APP 80 Glass Base, SBS Glass FR Torch, or SBS Poly Torch Base torch adhered	Min. 0.5-inch *ISO* installed with I.S.O. Twin Pack or I.S.O. Spray R applied in ribbons spaced 12-inch o.c.	*ISO HD* or *DensDeck Prime* installed with I.S.O. Twin Pack or I.S.O. Spray R applied in ribbons spaced 12-inch o.c	*UltraPly TPO*	*Membrane Adhesive II*	**-262.5 (Lim. 9)**
				UltraPly TPO FA	*Membrane Adhesive I*	
				UltraPly TPO SA (HVHZ ONLY)	Self-adhered	
				UltraPly TPO XR	*XR-S or* I.S.O. Spray R ribbon adhered 12-inch o.c.	
C-A-37	APP 80 Glass Base torched adhered	Min. 0.5-inch *ISO* installed with I.S.O. Twin Pack applied in ribbons spaced 12-inch o.c	Min 0.5-inch *ISO HD* installed with I.S.O. Twin Pack applied in ribbons spaced 12-inch o.c	*UltraPly TPO*	*Membrane Adhesive II*	**-277.5 (Lim. 9)**
				UltraPly TPO FA	*Membrane Adhesive I*	
C-A-38	APP 80 Glass Base torched adhered	Min. 1-inch *ISO CG* installed with I.S.O. Twin Pack applied in ribbons spaced 12-inch o.c	OPTIONAL Min 0.5-inch *ISO HD* installed with I.S.O. Twin Pack applied in ribbons spaced 12-inch o.c	*UltraPly TPO* or *UltraPly TPO FA*	Single Ply LVOC Bonding Adhesive or UltraPly Bonding Adhesive	**-277.5 (Lim. 9)**
C-A-39	APP 80 Glass Base torched adhered	Min. 0.5-inch *ISO* or Min. 1-inch *ISO CG* installed with I.S.O. Twin Pack applied in ribbons spaced 12-inch o.c	OPTIONAL Min 0.5-inch *ISO HD* installed with I.S.O. Twin Pack applied in ribbons spaced 12-inch o.c	*UltraPly TPO SA (HVHZ ONLY)*	Self-adhered	**-277.5 (Lim. 9)**
C-A-40	-	-	*ISO HD* *Insulation Adhesive II* ribbon adhered12-inch o.c.	*UltraPly TPO XR*	*XR-S or* I.S.O. Spray R ribbon adhered 12-inch o.c. or *JBSA*	**-285 (Lim. 9)**
C-A-41	-	Min. 0.5-inch *ISO* or Min. 1-inch *ISO CG* installed with I.S.O. Twin Pack applied in ribbons spaced 12-inch o.c	Min 0.5-inch *ISO HD* installed with I.S.O. Twin Pack applied in ribbons spaced 12-inch o.c	*UltraPly TPO SA (HVHZ ONLY)*	Self-adhered	**-300 (Lim. 9)**
C-A-42	-	Min. 0.5-inch *ISO* installed with I.S.O. Twin Pack applied in ribbons spaced 12-inch o.c	-	*UltraPly TPO SA (HVHZ ONLY)*	Self-adhered	**-337.5 (Lim. 9)**
C-A-43	-	*ISO* *Insulation Adhesive* ribbon adhered 6-inch o.c.	*SECUROCK* I.S.O. Stick or I.S.O. Spray R ribbon adhered 6-inch o.c.	*UltraPly TPO*	*Membrane Adhesive V*	**-347.5 (Lim. 9)**
				UltraPly TPO FA	*Membrane Adhesive IV*	
				UltraPly TPO XR	*XR-S* ribbon adhered 12-inch o.c.; *XR-BA; PermaMop; HA*	

This evaluation report is provided for State of Florida product approval under Rule 61G20-3. The manufacturer shall notify CREEK Technical Services, LLC of any product changes or quality assurance changes throughout the duration for which this report is valid. This evaluation report does not express nor imply warranty, installation, recommended use, or other product attributes that are not specifically addressed herein.

Assemblies with All Layers Adhered over *Concrete Deck* (New or Existing)						
System No.	Vapor Barrier	Base Insulation	Top Insulation	Membrane	Membrane Attachment	*MDP* (psf)
C-A-44	OPTIONAL *V-Force* or 1-2 ply of Ply IV or VI in hot asphalt or APP 80 Glass Base, SBS Glass FR Torch, or SBS Poly Torch Base torch adhered	Min. 0.5-inch *ISO* installed with I.S.O. Twin Pack or I.S.O. Spray R applied in ribbons spaced 12-inch o.c.	*SECUROCK* installed with I.S.O. Twin Pack or I.S.O. Spray R applied in ribbons spaced 12-inch o.c.	*UltraPly TPO* or *UltraPly TPO FA*	UltraPly Bonding Adhesive or *JBSA*	**-347.5 (Lim. 9)**
				UltraPly TPO XR	*XR-S* ribbon adhered 12-inch o.c.; *PermaMop*	
C-A-45	OPTIONAL *VB*	OPTIONAL Min. 1-inch *ISO*; I.S.O. Spray R ribbon adhered 12-inch o.c.	*DensDeck Prime;* I.S.O. Spray R ribbon adhered 12-inch o.c.	*UltraPly TPO XR*	I.S.O. Spray R ribbon adhered 4-inch o.c.	**-360 (Lim. 9)**
C-A-46	-	Min. 0.5-inch *ISO* or Min. 1-inch *ISO CG* installed with I.S.O. Twin Pack applied in ribbons spaced 12-inch o.c	Min 0.5-inch *ISO HD* installed with I.S.O. Twin Pack applied in ribbons spaced 12-inch o.c	*UltraPly TPO*	*Membrane Adhesive II*	**-360 (Lim. 9)**
				UltraPly TPO FA	*Membrane Adhesive I*	
C-A-47	-	Min. 1-inch *ISO CG* installed with I.S.O. Twin Pack applied in ribbons spaced 12-inch o.c	-	*UltraPly TPO* or *UltraPly TPO FA*	UltraPly Bonding Adhesive, Single-Ply LVOC Bonding Adhesive, or *JBSA*	**-360 (Lim. 9)**
				UltraPly TPO SA (HVHZ ONLY)	Self-adhered	
C-A-48	*V-Force* or 1-2 ply of Ply IV or VI in hot asphalt or APP 80 Glass Base, SBS Glass FR Torch, or SBS Poly Torch Base torch adhered	Min. 0.5-inch *ISO* installed with I.S.O. Twin Pack or I.S.O. Spray R applied in ribbons spaced 12-inch o.c.	*SECUROCK* installed with I.S.O. Twin Pack or I.S.O. Spray R applied in ribbons spaced 12-inch o.c.	*UltraPly TPO* or *UltraPly TPO FA*	UltraPly Bonding Adhesive	**-400 (Lim. 9)**
				UltraPly TPO XR	*XR-S* ribbon adhered 12-inch o.c.; *PermaMop*	
C-A-49	-	*SECUROCK* I.S.O. Spray R ribbon adhered 12-inch o.c.	-	*UltraPly TPO* or *UltraPly TPO FA*	UltraPly Bonding Adhesive	**-435 (Lim. 9)**
				UltraPly TPO XR	*XR-S* ribbon adhered 12-inch o.c.; *PermaMop*	
C-A-50	-	*SECUROCK Insulation Adhesive* ribbon adhered12-inch o.c.	-	*UltraPly TPO XR*	*XR-S* ribbon adhered 12-inch o.c.; *PermaMop*	**-445 (Lim. 9)**
C-A-51	-	-	*ISO HD Insulation Adhesive II* ribbon adhered 12-inch o.c.	*UltraPly TPO*	*Membrane Adhesive II*	**-445 (Lim. 9)**
				UltraPly TPO FA	*Membrane Adhesive I*	
				UltraPly TPO SA (HVHZ ONLY)	Self-adhered	
C-A-52	*V-Force* or 1-2 ply of Ply IV or VI in hot asphalt or APP 80 Glass Base, SBS Glass FR Torch, or SBS Poly Torch Base torch adhered	Min. 0.5-inch *ISO* installed with I.S.O. Twin Pack or I.S.O. Spray R applied in ribbons spaced 12-inch o.c.	*SECUROCK* installed with I.S.O. Twin Pack or I.S.O. Spray R applied in ribbons spaced 12-inch o.c.	*UltraPly TPO* or *UltraPly TPO FA*	UltraPly Bonding Adhesive	**-495 (Lim. 9)**

This evaluation report is provided for State of Florida product approval under Rule 61G20-3. The manufacturer shall notify CREEK Technical Services, LLC of any product changes or quality assurance changes throughout the duration for which this report is valid. This evaluation report does not express nor imply warranty, installation, recommended use, or other product attributes that are not specifically addressed herein.

Assemblies with All Layers Adhered over *Concrete Deck* (New or Existing)						
System No.	Vapor Barrier	Base Insulation	Top Insulation	Membrane	Membrane Attachment	*MDP* (psf)
C-A-53	-	*SECUROCK Insulation Adhesive* ribbon adhered 12-inch o.c.	-	*UltraPly TPO* or *UltraPly TPO FA*	UltraPly Bonding Adhesive	**-495 (Lim. 9)**
C-A-54	-	-	-	*UltraPly TPO XR*	*TJ-S*	**-502.5 (Lim. 9)**

Assemblies with Adhered Membranes over Insulated *Concrete Deck* (New, Existing or *Recover*)							
System No.	Base Insulation	Base Insulation Attachment	Top Insulation or Base Sheet	Top Insulation or Base Sheet Attachment	Membrane	Membrane Attachment	*MDP* (psf)
C-AM-1	OPTIONAL *Insulation*	*Preliminarily Secured* or secured with top layer	0.5-inch DensDeck Prime	*CD Fasteners & Insulation Plates* or *HD Fasteners & Insulation Plates* secured *10 per 4 ft. x 8 ft. board*	*UltraPly TPO*	*Membrane Adhesive V*	**-30 (Lim. 7; Non-HVHZ)**
					UltraPly TPO FSA	Self-adhered	
					UltraPly TPO FA	*Membrane Adhesive IV*	
C-AM-2	Min. 0.5-inch *Insulation*	*Preliminarily Secured* or secured with top layer	0.5-inch DensDeck Prime	*CD Fasteners & Insulation Plates* or *HD Fasteners & Insulation Plates* secured *10 per 4 ft. x 8 ft. board*	*UltraPly TPO* XR	*XR-S* or I.S.O. Spray R ribbon adhered 12-inch o.c.;*HA; PermaMop; XR-BA; JBSA* or *TJ-S*	**-30 (Lim. 7; Non-HVHZ)**
C-AM-3	Min. 0.5-inch *ISO*	*Preliminarily Secured* or secured with top layer	SBS PolyBase	*HD Fasteners & Plates* or *CD Fasteners & Plates* secured 12-inch o.c. within the 3-3/8" welded lap	*UltraPly TPO* XR	I.S.O. Spray R ribbon adhered 12-inch o.c.	**-37.5 (Lim. 7; Non-HVHZ)**
C-AM-4	OPTIONAL *Insulation*	*Preliminarily Secured* or secured with top layer	Min. 2-inch *ISO, ISO HD-C* or *ISO CG*	*HD Fasteners & Plates* or *CD Fasteners & Plates* secured *12 per 4 ft. x 8 ft. board (Alt. Pattern 2)*	*UltraPly TPO* or *UltraPly TPO FA*	*Membrane Adhesive I*	**-37.5 (Lim. 7; Non-HVHZ)**
					UltraPly TPO FSA	Self-adhered	
C-AM-5	Min. 0.5-inch *Insulation*	*Preliminarily Secured* or Secured with Top Layer	MB Base, SBS Base or Channel Venting Base	*CD Fasteners & Insulation Plates* or *HD Fasteners & Insulation Plates* secured 12-inch o.c. at the lap and 12-inch o.c. in two staggered, intermediate rows	*UltraPly TPO XR*	*HA or PermaMop*	**-45 (Lim. 7; Non-HVHZ)**
C-AM-6	Min. 0.5-inch *Insulation*	*Preliminarily Secured* or Secured with Top Layer	SBS Base 3.4-inch side laps	*CD Fasteners & Insulation Plates* or *HD Fasteners & Insulation Plates* secured 12-inch o.c. at the lap and 12-inch o.c. in two staggered, intermediate rows	*UltraPly TPO XR*	*XR-S* or I.S.O. Spray R Ribbons spaced 12" o.c. and located directly over the base sheet fastener rows	**-45 (Lim. 7; Non-HVHZ)**

This evaluation report is provided for State of Florida product approval under Rule 61G20-3. The manufacturer shall notify CREEK Technical Services, LLC of any product changes or quality assurance changes throughout the duration for which this report is valid. This evaluation report does not express nor imply warranty, installation, recommended use, or other product attributes that are not specifically addressed herein.

Assemblies with Adhered Membranes over Insulated *Concrete Deck* (New, Existing or *Recover*)							
System No.	Base Insulation	Base Insulation Attachment	Top Insulation or Base Sheet	Top Insulation or Base Sheet Attachment	Membrane	Membrane Attachment	*MDP* (psf)
C-AM-7	OPTIONAL *Insulation*	*Preliminarily Secured* or Secured with Top Layer	*SECUROCK*	*CD Fasteners & Insulation Plates* or *HD Fasteners & Insulation Plates* secured *18 per 4 ft. x 8 ft. board*	*UltraPly TPO*	*Membrane Adhesive V*	**-45 (Lim. 7)**
					UltraPly TPO FA	*Membrane Adhesive IV*	
					UltraPly TPO SA (HVHZ ONLY)	Self-adhered	
					UltraPly TPO FSA	Self-adhered	
					UltraPly TPO XR	*XR-S, TJ-R,* or I.S.O. Spray R ribbon adhered 12-inch o.c.; *HA; PermaMop; XR-BA; JBSA* or *TJ-S*	
C-AM-8	OPTIONAL *Insulation*	*Preliminarily Secured* or secured with top layer	Min. 0.5-inch *DensDeck Prime*	*CD Fasteners & Insulation Plates* or *HD Fasteners & Insulation Plates* secured *12 per 4 ft. x 8 ft. board*	*UltraPly TPO*	*Membrane Adhesive V*	**-45 (Lim. 7; Non-HVHZ)**
					UltraPly TPO FA	*Membrane Adhesive IV*	
					UltraPly TPO FSA	Self-adhered	
					UltraPly TPO XR	*XR-S, TJ-R,* or I.S.O. Spray R ribbon adhered 12-inch o.c.; *HA; PermaMop; XR-BA; JBSA* or *TJ-S*	
C-AM-9	OPTIONAL *Insulation*	*Preliminarily Secured* or secured with top layer	Min. 0.5-inch *SECUROCK*	*CD Fasteners & Insulation Plates* or *HD Fasteners & Insulation Plates* secured *8 per 4 ft. x 8 ft. board*	*UltraPly TPO*	*Membrane Adhesive V*	**-45 (Lim. 7; Non-HVHZ)**
					UltraPly TPO FA	*Membrane Adhesive IV*	
					UltraPly TPO FSA	Self-adhered	
					UltraPly TPO XR	*XR-S, TJ-R,* or I.S.O. Spray R ribbon adhered 12-inch o.c.; *HA; PermaMop; XR-BA; JBSA* or *TJ-S*	
C-AM-10	OPTIONAL *Insulation*	*Preliminarily Secured* or Secured with Top Layer	Min. 2-inch *ISO*	*CD Fasteners & Insulation Plates* or *HD Fasteners & Insulation Plates* secured *12 per 4 ft. x 8 ft. board*	*UltraPly TPO*	*Membrane Adhesive V*	**-45 (Lim. 7)**
					UltraPly TPO FA	*Membrane Adhesive IV*	
					UltraPly TPO FSA	Self-adhered	
					UltraPly TPO SA (HVHZ ONLY)	Self-adhered	
C-AM-11	*DensDeck Prime*	*CD Fasteners & Plates* or *HD Fasteners & Insulation Plates* secured *8 per 4 ft x 8 ft board* followed by *V-Force*	Min. 1.5-inch *ISO* or Tapered *ISO* with *ISO HD* or *DensDeck Prime*	I.S.O. Stick or Twin Jet applied in ribbons spaced 12-inch o.c.	*UltraPly TPO*	*Membrane Adhesive V*	**-45 (Lim. 7; Non-HVHZ)**
					UltraPly TPO FA	*Membrane Adhesive IV*	
					UltraPly TPO FSA	Self-adhered	
					UltraPly TPO XR	*XR-S, TJ-R, or* I.S.O. Spray R ribbon adhered 12-inch o.c.; *JBSA* or *TJ-S*	

This evaluation report is provided for State of Florida product approval under Rule 61G20-3. The manufacturer shall notify CREEK Technical Services, LLC of any product changes or quality assurance changes throughout the duration for which this report is valid. This evaluation report does not express nor imply warranty, installation, recommended use, or other product attributes that are not specifically addressed herein.

Assemblies with Adhered Membranes over Insulated *Concrete Deck* (New, Existing or *Recover*)							
System No.	Base Insulation	Base Insulation Attachment	Top Insulation or Base Sheet	Top Insulation or Base Sheet Attachment	Membrane	Membrane Attachment	*MDP* (psf)
C-AM-12	OPTIONAL *Insulation*	*Preliminarily Secured* or Secured with Top Layer	Min. 1-inch *ISO CG*	*CD Fasteners & Insulation Plates* or *HD Fasteners & Insulation Plates* secured *20 per 4 ft. x 8 ft. board (Alt. Pattern)*	*UltraPly TPO or UltraPly TPO FA*	UltraPly Bonding Adhesive or *JBSA*	**-52.5 (Lim. 7)**
					UltraPly TPO FSA	Self-adhered	
					UltraPly TPO SA (HVHZ ONLY)	Self-adhered	
C-AM-13	OPTIONAL *Insulation*	*Preliminarily Secured* or secured with top layer	*DensDeck Prime*	*CD Fasteners & Insulation Plates* or *HD Fasteners & Insulation Plates* secured *18 per 4 ft. x 8 ft. board*	*UltraPly TPO*	*Membrane Adhesive V*	**-52.5 (Lim. 7)**
					UltraPly TPO FA	*Membrane Adhesive IV*	
					UltraPly TPO FSA	Self-adhered	
					UltraPly TPO SA (HVHZ ONLY)	Self-adhered	
					UltraPly TPO XR	*XR-BA, PermaMop; HA;* or *TJ-S*	
C-AM-14	OPTIONAL *Insulation*	*Preliminarily Secured* or Secured with Top Layer	Min. 1.5-inch *ISO*	*CD Fasteners & Insulation Plates* or *HD Fasteners & Insulation Plates* secured *18 per 4 ft. x 8 ft. board*	*UltraPly TPO* or *UltraPly TPO FA*	*Membrane Adhesive IV*	**-60 (Lim. 7)**
					UltraPly TPO FSA	Self-adhered	
					UltraPly TPO SA (HVHZ ONLY)	Self-adhered	
C-AM-15	OPTIONAL *Insulation*	*Preliminarily Secured* or Secured with Top Layer	Min. 0.5-inch *SECUROCK*	*CD Fasteners & Insulation Plates* or *HD Fasteners & Insulation Plates* secured *18 per 4 ft. x 8 ft. board*	*UltraPly TPO* or *UltraPly TPO FA*	*Membrane Adhesive IV*	**-60 (Lim. 7)**
					UltraPly TPO FSA	Self-adhered	
					UltraPly TPO SA (HVHZ ONLY)	Self-adhered	
					UltraPly TPO XR	*XR-BA, PermaMop; HA;* or *TJ-S*	
C-AM-16	Min. 1.5-inch *ISO*	*CD Fasteners & Insulation Plates* or *HD Fasteners & Insulation Plates* secured *18 per 4 ft. x 8 ft. board*	Min. 1.5-inch *ISO HD-C*	*Insulation Adhesive VII* Ribbons spaced 12-inch o.c	*UltraPly TPO* or *UltraPly TPO FA*	UltraPly Bonding Adhesive or *JBSA*	**-60 (Lim. 7)**
					UltraPly TPO FSA	Self-adhered	
					UltraPly TPO SA (HVHZ ONLY)	Self-adhered	

This evaluation report is provided for State of Florida product approval under Rule 61G20-3. The manufacturer shall notify CREEK Technical Services, LLC of any product changes or quality assurance changes throughout the duration for which this report is valid. This evaluation report does not express nor imply warranty, installation, recommended use, or other product attributes that are not specifically addressed herein.

Assemblies with Adhered Membranes over Insulated *Concrete Deck* (New, Existing or *Recover*)							
System No.	Base Insulation	Base Insulation Attachment	Top Insulation or Base Sheet	Top Insulation or Base Sheet Attachment	Membrane	Membrane Attachment	*MDP* (psf)
C-AM-17	OPTIONAL *Insulation*	*Preliminarily Secured* or secured with top layer	Min. 0.5-inch *SECUROCK*	*CD Fasteners & Insulation Plates* or *HD Fasteners & Insulation Plates* secured *15 per 4 ft. x 8 ft. board*	*UltraPly TPO* or *UltraPly TPO FA*	*Membrane Adhesive IV*	**-60 (Lim. 7)**
					UltraPly TPO FSA	Self-adhered	
					UltraPly TPO SA (HVHZ ONLY)	Self-adhered	
					UltraPly TPO XR	*XR-BA, PermaMop; HA;* or *TJ-S*	
C-AM-18	Min. 2-inch *ISO* or *ISO CG*	*CD Fasteners & Insulation Plates* or *HD Fasteners & Insulation Plates* secured *18 per 4 ft. x 8 ft. board*	Min. 0.5-inch *ISO* or *ISO CG* followed by *ISO HD*	*Insulation Adhesive VI* Ribbons spaced 6-inch o.c.	*UltraPly TPO*	*Membrane Adhesive V*	**-60 (Lim. 7)**
					UltraPly TPO FA	*Membrane Adhesive IV*	
					UltraPly TPO FSA	Self-adhered	
					UltraPly TPO SA (HVHZ ONLY)	Self-adhered	
					UltraPly TPO XR	*XR-S, TJ-R,* or I.S.O. Spray R ribbon adhered 12-inch o.c.; *JBSA* or *TJ-S*	
C-AM-19	OPTIONAL *Insulation*	*Preliminarily Secured* or secured with top layer	Min. 0.5-inch *SECUROCK*	*CD Fasteners & Insulation Plates* or *HD Fasteners & Insulation Plates* secured *8 per 4 ft. x 8 ft. board*	*UltraPly TPO* or *UltraPly TPO FA*	*Membrane Adhesive IV*	**-62.5 (Lim. 9)**
					UltraPly TPO FSA	Self-adhered	
					UltraPly TPO SA (HVHZ ONLY)	Self-adhered	
					UltraPly TPO XR	*XR-BA, PermaMop; HA;* or *TJ-S*	
C-AM-20	Min. 2-inch *ISO* or *ISO CG*	*CD Fasteners & Insulation Plates* or *HD Fasteners & Insulation Plates* secured *18 per 4 ft. x 8 ft. board*	*ISO HD*	*Insulation Adhesive VI* Ribbons spaced 6-inch o.c.	*UltraPly TPO*	*Membrane Adhesive V*	**-67.5 (Lim. 7)**
					UltraPly TPO FA	*Membrane Adhesive IV*	
					UltraPly TPO FSA	Self-adhered	
					UltraPly TPO SA (HVHZ ONLY)	Self-adhered	
					UltraPly TPO XR	*XR-S, TJ-R,* or I.S.O. Spray R ribbon adhered 12-inch o.c.; *JBSA* or *TJ-S*	

This evaluation report is provided for State of Florida product approval under Rule 61G20-3. The manufacturer shall notify CREEK Technical Services, LLC of any product changes or quality assurance changes throughout the duration for which this report is valid. This evaluation report does not express nor imply warranty, installation, recommended use, or other product attributes that are not specifically addressed herein.

Assemblies with Adhered Membranes over Insulated *Concrete Deck* (New, Existing or *Recover*)							
System No.	Base Insulation	Base Insulation Attachment	Top Insulation or Base Sheet	Top Insulation or Base Sheet Attachment	Membrane	Membrane Attachment	*MDP* (psf)
C-AM-21	Min. 2-inch *ISO*	*CD Fasteners & Insulation Plates* or *HD Fasteners & Insulation Plates* secured *18 per 4 ft. x 8 ft. board*	*SECUROCK*	Insulation Adhesive VII Ribbons spaced 6-inch o.c.	*UltraPly TPO* or *UltraPly TPO FA*	*Membrane Adhesive IV*	**-67.5 (Lim. 7)**
					UltraPly TPO FSA	Self-adhered	
					UltraPly TPO SA (HVHZ ONLY)	Self-adhered	
					UltraPly TPO XR	*XR-BA, PermaMop; HA;* or *TJ-S*	
C-AM-22	OPTIONAL *Insulation*	*Preliminarily Secured* or secured with top layer	Min. 0.5-inch *SECUROCK*	*CD Fasteners & Insulation Plates* or *HD Fasteners & Insulation Plates* secured *20 per 4 ft. x 8 ft. board*	*UltraPly TPO* or *UltraPly TPO FA*	*Membrane Adhesive IV*	**-67.5 (Lim. 7)**
					UltraPly TPO FSA	Self-adhered	
					UltraPly TPO SA (HVHZ ONLY)	Self-adhered	
					UltraPly TPO XR	*XR-BA, PermaMop; HA;* or *TJ-S*	
C-AM-23	OPTIONAL *Insulation*	*Preliminarily Secured* or secured with top layer	Min. 1.5-inch *ISO HD-C*	*CD Fasteners & Insulation Plates* or *HD Fasteners & Insulation Plates* secured *15 per 4 ft. x 8 ft. board*	*UltraPly TPO* or *UltraPly TPO FA*	UltraPly Bonding Adhesive or *JBSA*	**-67.5 (Lim. 7)**
					UltraPly TPO FSA	Self-adhered	
					UltraPly TPO SA (HVHZ ONLY)	Self-adhered	
C-AM-24	OPTIONAL *Insulation*	*Preliminarily Secured* or secured with top layer	Min. 0.5-inch *DensDeck Prime*	*CD Fasteners & Insulation Plates* or *HD Fasteners & Insulation Plates* secured *18 per 4 ft. x 8 ft. board*	*UltraPly TPO*	*Membrane Adhesive III*	**-67.5 (Lim. 7)**
					UltraPly TPO FA	Single-Ply LVOC Bonding Adhesive or Single-Ply LVOC Bonding Adhesive 1168	
					UltraPly TPO FSA	Self-adhered	
					UltraPly TPO SA (HVHZ ONLY)	Self-adhered	
					UltraPly TPO XR	*XR-S, TJ-R,* ribbon adhered 4-inch o.c.; *JBSA* or *TJ-S*	
C-AM-25	OPTIONAL *Insulation*	*Preliminarily Secured* or secured with top layer	Min. 1.5-inch *ISO HD-C*	*CD Fasteners & Insulation Plates* or *HD Fasteners & Insulation Plates* secured *18 per 4 ft. x 8 ft. board*	*UltraPly TPO* or *UltraPly TPO FA*	UltraPly Bonding Adhesive or *JBSA*	**-75 (Lim. 7)**
					UltraPly TPO FSA	Self-adhered	
					UltraPly TPO SA (HVHZ ONLY)	Self-adhered	

This evaluation report is provided for State of Florida product approval under Rule 61G20-3. The manufacturer shall notify CREEK Technical Services, LLC of any product changes or quality assurance changes throughout the duration for which this report is valid. This evaluation report does not express nor imply warranty, installation, recommended use, or other product attributes that are not specifically addressed herein.

Assemblies with Adhered Membranes over Insulated *Concrete Deck* (New, Existing or *Recover*)							
System No.	Base Insulation	Base Insulation Attachment	Top Insulation or Base Sheet	Top Insulation or Base Sheet Attachment	Membrane	Membrane Attachment	*MDP* (psf)
C-AM-26	OPTIONAL *Insulation*	*Preliminarily Secured* or Secured with Top Layer	Min. 2-inch *ISO*	*CD Fasteners & Insulation Plates* or *HD Fasteners & Insulation Plates* secured *20 per 4 ft. x 8 ft. board*	*UltraPly TPO* or *UltraPly TPO FA*	*Membrane Adhesive IV*	**-75 (Lim. 7)**
					UltraPly TPO FSA	Self-adhered	
					UltraPly TPO SA (HVHZ ONLY)	Self-adhered	
C-AM-27	OPTIONAL *Insulation*	*Preliminarily Secured* or secured with top layer	Min. 0.5-inch *DensDeck Prime*	*CD Fasteners & Insulation Plates* or *HD Fasteners & Insulation Plates* secured *20 per 4 ft. x 8 ft. board*	*UltraPly TPO*	*Membrane Adhesive III*	**-75 (Lim. 7)**
					UltraPly TPO FA	Single-Ply LVOC Bonding Adhesive or Single-Ply LVOC Bonding Adhesive 1168	
					UltraPly TPO FSA	Self-adhered	
					UltraPly TPO SA (HVHZ ONLY)	Self-adhered	
					UltraPly TPO XR	*XR-S, TJ-R,* ribbon adhered 4-inch o.c.; or *TJ-S*	
C-AM-28	Min. 2-inch *ISO*	*CD Fasteners & Insulation Plates* or *HD Fasteners & Insulation Plates* secured *20 per 4 ft. x 8 ft. board*	*ISO HD*	I.S.O. Stick, I.S.O. Spray R, I.S.O. Twin Pack, or Twin Jet ribbon adhered 6-inch o.c.	*UltraPly TPO XR*	*XR-S, TJ-R,* ribbon adhered 6-inch o.c.; or *TJ-S*	**-82.5 (Lim. 7)**
C-AM-29	OPTIONAL *Insulation*	*Preliminarily Secured* or Secured with Top Layer	Min. 0.5-inch *SECUROCK*	*CD Fasteners & Insulation Plates* or *HD Fasteners & Insulation Plates* secured *18 per 4 ft. x 8 ft. board*	*UltraPly TPO* or *UltraPly TPO FA*	*Membrane Adhesive IV*	**-82.5 (Lim. 7)**
					UltraPly TPO FSA	Self-adhered	
					UltraPly TPO SA (HVHZ ONLY)	Self-adhered	
C-AM-30	OPTIONAL *Insulation*	*Preliminarily Secured* or Secured with Top Layer	Min. 1.5-inch *ISO*	*CD Fasteners & Insulation Plates* or *HD Fasteners & Insulation Plates* secured *24 per 4 ft. x 8 ft. board*	*UltraPly TPO* or *UltraPly TPO FA*	*Membrane Adhesive I*	**-90 (Lim. 7)**
					UltraPly TPO FSA	Self-adhered	
					UltraPly TPO SA (HVHZ ONLY)	Self-adhered	

This evaluation report is provided for State of Florida product approval under Rule 61G20-3. The manufacturer shall notify CREEK Technical Services, LLC of any product changes or quality assurance changes throughout the duration for which this report is valid. This evaluation report does not express nor imply warranty, installation, recommended use, or other product attributes that are not specifically addressed herein.

Mechanically Fastened Assemblies over *Concrete Deck* (New or Existing)								
System No.	Vapor Barrier	Base Insulation	Base Insulation Attachment	Top Insulation	Top Insulation Attachment	Membrane	Membrane Attachment	*MDP* (psf)
C-M-1	-	OPTIONAL *Insulation*	*Preliminarily Secured* or Secured with Top Layer	OPTIONAL *Cover Board*	*Preliminarily Secured*	*UltraPly TPO* (120-inch wide)	Attached in-lap 12-inch o.c. with *HD Fasteners & Plates;* Side laps spaced 114-inch o.c.	**-30 (Lim. 7; Non-HVHZ)**
C-M-2	V-Force Vapor Barrier Membrane installed as *Air Barrier*	OPTIONAL *Insulation*	*Preliminarily Secured* or secured with top layer	Min. 2-inch *ISO*, *ISO CG* or ISOGARD HD Composite	*HD Fasteners & Insulation Plates* secured *6 per 4-ft x 8-ft board*	*UltraPly TPO* (148-inch wide)	Attached in-lap 12-inch o.c. with *HD Fasteners & Plates;* Side laps spaced 142-inch o.c.	**-37.5 (Lim. 7; Non-HVHZ)**
C-M-3	-	Min. 1.5-inch *Insulation*	*Preliminarily Secured* or secured with top layer	OPTIONAL *Cover Board*	*Preliminarily Secured*	Min. 60 mil *UltraPly TPO* (120-inch wide)	Attached in-lap 12-inch o.c. with *HD Fasteners & Plates* or *CD Fasteners & Plates;* Side laps spaced 114-inch o.c.	**-37.5 (Lim. 7; Non-HVHZ)**
C-M-4	-	Min. 1.5-inch *Insulation*	*Preliminarily Secured* or secured with top layer	OPTIONAL *Cover Board*	*Preliminarily Secured*	*UltraPly TPO*	UltraPly QuickSeam R.M.A Strip attached 72-inch o.c. and secured with Polymer Batten Strip and Heavy-Duty fasteners spaced 12-inch o.c. along the batten	**-37.5 (Lim. 7; Non-HVHZ)**
C-M-5	-	Min. 1.5-inch *Insulation*	*Preliminarily Secured* or secured with top layer	OPTIONAL *Cover Board*	*Preliminarily Secured*	*UltraPly TPO*	UltraPly QuickSeam R.M.A Strip attached 114-inch o.c. and secured with *HD Fasteners & Plates* or *CD Fasteners & Plates* spaced 12-inch o.c.	**-37.5 (Lim. 7; Non-HVHZ)**
C-M-6	-	Min. 1.5-inch *Insulation*	*Preliminarily Secured* or secured with top layer	OPTIONAL *Cover Board*	*Preliminarily Secured*	*UltraPly TPO* (48-inch wide)	Attached in-lap 24-inch o.c. with *HD Fasteners & Plates* or *CD Fasteners & Plates*; Fastener rows 42-inch o.c.	**-45 (Lim. 7; Non-HVHZ)**
C-M-7	-	Min. 1.5-inch *Insulation*	*Preliminarily Secured* or secured with top layer	OPTIONAL *Cover Board*	*Preliminarily Secured*	*UltraPly TPO*	UltraPly QuickSeam R.M.A Strip attached 48-inch o.c. and secured with *HD Fasteners & Plates* or *CD Fasteners & Plates* spaced 24-inch o.c.	**-45 (Lim. 7; Non-HVHZ)**

This evaluation report is provided for State of Florida product approval under Rule 61G20-3. The manufacturer shall notify CREEK Technical Services, LLC of any product changes or quality assurance changes throughout the duration for which this report is valid. This evaluation report does not express nor imply warranty, installation, recommended use, or other product attributes that are not specifically addressed herein.

Mechanically Fastened Assemblies over *Concrete Deck* (New or Existing)								
System No.	Vapor Barrier	Base Insulation	Base Insulation Attachment	Top Insulation	Top Insulation Attachment	Membrane	Membrane Attachment	*MDP* (psf)
C-M-8	-	Min. 1.5-inch *Insulation*	*Preliminarily Secured* or secured with top layer	OPTIONAL *Cover Board*	*Preliminarily Secured*	*UltraPly TPO*	UltraPly QuickSeam R.M.A Strip attached 48-inch o.c. and secured with Polymer Batten Strip and Heavy-Duty fasteners spaced 24-inch o.c. along the batten	**-45 (Lim. 7; Non-HVHZ)**
C-M-9	-	Min. 1.5-inch *Insulation*	*Preliminarily Secured* or secured with top layer	OPTIONAL *Cover Board*	*Preliminarily Secured*	*UltraPly TPO* (120-inch wide)	Attached in-lap 12-inch o.c. with *HD Fasteners &* Plates or *CD Fasteners & Plates*; Fastener rows spaced 114-inch o.c.; UltraPly QuickSeam R.M.A Strip attached evenly spaced between side laps and secured with Polymer Batten Strip and Heavy-Duty fasteners spaced 12-inch o.c. along the batten	**-45 (Lim. 7)**
C-M-10	-	Min. 1.5-inch Insulation	*Preliminarily Secured or secured with top layer*	OPTIONAL Cover Board	*Preliminarily Secured*	*UltraPly TPO*	UltraPly QuickSeam R.M.A Strip attached 72-inch o.c. and secured with *HD Fasteners & Plates* or *CD Fasteners & Plates* spaced 12-inch o.c.	**-45 (Lim. 7)**
C-M-11	V-Force Vapor Barrier Membrane installed as *Air Barrier*	OPTIONAL *Insulation*	*Preliminarily Secured* or Secured with Top Layer	Min. 3-inch *ISO*, *ISO CG* or ISOGARD HD Composite	*HD Fasteners & Insulation Plates fasteners* secured *8 per 4-ft x 8-ft board*	*UltraPly TPO* (120-inch wide)	Attached in-lap 12-inch o.c. with *HD Fasteners & Plates;* Side laps spaced 114-inch o.c.	**-45 (Lim. 7)**
C-M-12	*DensDeck Prime* loose-laid with V-Force Vapor Barrier Membrane installed as *Air Barrier*	OPTIONAL *Insulation*	*Preliminarily Secured* or Secured with Top Layer	Min. 2-inch *ISO*, *ISO CG* or ISOGARD HD Composite	*CD Fasteners & Insulation Plates* or *HD Fasteners & Insulation Plates* secured min. *8 per 4-ft x 8-ft board*	*UltraPly TPO* (120-inch wide)	Attached in-lap 12-inch o.c. with *HD Fasteners & Plates*; Fastener rows 114-inch o.c.	**-45 (Lim. 7)**

This evaluation report is provided for State of Florida product approval under Rule 61G20-3. The manufacturer shall notify CREEK Technical Services, LLC of any product changes or quality assurance changes throughout the duration for which this report is valid. This evaluation report does not express nor imply warranty, installation, recommended use, or other product attributes that are not specifically addressed herein.

Mechanically Fastened Assemblies over *Concrete Deck* (New or Existing)								
System No.	Vapor Barrier	Base Insulation	Base Insulation Attachment	Top Insulation	Top Insulation Attachment	Membrane	Membrane Attachment	*MDP* (psf)
C-M-13	V-Force Vapor Barrier Membrane installed as *Air Barrier* adhered over loose-laid *SECUROCK*	OPTIONAL *Insulation*	*Preliminarily Secured* or secured with top layer	Min. 3-inch ISO 95-GL, *ISO CG*, or *ISO HD-C*	*HD Fasteners & Insulation Plates* fasteners secured *8 per 4 ft. x 8 ft. board*	*UltraPly TPO* (120-inch wide)	Attached in-lap 12-inch o.c. with *HD Fasteners & Plates*; Side laps spaced 114-inch o.c.	**-52.5 (Lim. 7)**
C-M-14	-	Min. 1.5-inch *Insulation*	*Preliminarily Secured* or Secured with Top Layer	OPTIONAL *Cover Board*	*Preliminarily Secured*	*UltraPly TPO* (148-inch wide)	Attached in-lap 6-inch o.c. with *HD Fasteners & Plates*; Fastener rows 142-inch o.c.	**-52.5 (Lim. 7)**
C-M-15	-	*Insulation*	*Preliminarily Secured* or secured with top layer	OPTIONAL *Cover Board*	*Preliminarily Secured*	*UltraPly TPO* (96-inch wide)	Attached in-lap 6-inch o.c. with *HD Fasteners & Plates*; Fastener rows 90-inch o.c.	**-52.5 (Lim. 7)**
C-M-16	-	Min. 0.5-inch *Insulation*	*Preliminarily Secured* or secured with top layer	OPTIONAL *Cover Board*	*Preliminarily Secured*	*UltraPly TPO* (120-inch wide)	Attached in-lap 6-inch o.c. with *HD Fasteners & Plates* or *CD Fasteners & Plates*; Fastener rows 114-inch o.c.	**-52.5 (Lim. 7)**
C-M-17	-	Min. 1.5-inch Insulation	*Preliminarily Secured or secured with top layer*	OPTIONAL Cover Board	*Preliminarily Secured*	Min. 60 mil *UltraPly TPO* (60-inch wide)	Attached in-lap 12-inch o.c. with *HD Fasteners & Plates* or *CD Fasteners & Plates*; Fastener rows 54-inch o.c.	**-52.5 (Lim. 7)**
C-M-18	-	Min. 0.5-inch *Insulation*	*Preliminarily Secured* or secured with top layer	OPTIONAL *Cover Board*	*Preliminarily Secured*	*UltraPly TPO* (96-inch wide)	Attached in-lap 6-inch o.c. with *HD Fasteners & Plates* or *CD Fasteners & Plates*; Fastener rows 89-inch o.c.; 7-inch wide side laps	**-60 (Lim. 7)**
C-M-19	-	Min. 0.5-inch *Insulation*	*Preliminarily Secured* or secured with top layer	OPTIONAL *Cover Board*	*Preliminarily Secured*	Min. 60 mil UltraPly TPO (120-inch wide)	Attached in-lap 6-inch o.c. with *HD Fasteners & Plates* or *CD Fasteners & Plates*; Fastener rows 114-inch o.c.	**-60 (Lim. 7)**

This evaluation report is provided for State of Florida product approval under Rule 61G20-3. The manufacturer shall notify CREEK Technical Services, LLC of any product changes or quality assurance changes throughout the duration for which this report is valid. This evaluation report does not express nor imply warranty, installation, recommended use, or other product attributes that are not specifically addressed herein.

Mechanically Fastened Assemblies over *Concrete Deck* (New or Existing)								
System No.	Vapor Barrier	Base Insulation	Base Insulation Attachment	Top Insulation	Top Insulation Attachment	Membrane	Membrane Attachment	*MDP* (psf)
C-M-20	6 mil polyethylene sheet; 6-inch wide laps sealed with duct tape	Min. 2-inch *Insulation*	*CD Fasteners & Insulation Plates* or *HD Fasteners & Insulation Plates* secured *8 per 4 ft. x 8 ft. board*	OPTIONAL *Cover Board*	*Preliminarily Secured*	*UltraPly TPO* (96-inch wide)	Attached in-lap 6-inch o.c. *HD Fasteners & Plates* or *CD Fasteners & Plates*; Fastener rows 89-inch o.c.	**-67.5 (Lim. 7)**
C-M-21	-	Min. 0.5-inch *Insulation*	*Preliminarily Secured* or secured with top layer	OPTIONAL *Cover Board*	*Preliminarily Secured*	*UltraPly TPO* (120-inch wide)	Attached in-lap 6-inch o.c. with Heavy-Duty Fasteners and Coiled Metal Batten Bar; Fastener rows 114-inch o.c.; Min. 5-inch wide heat weld encapsulating batten and fasteners	**-75 (Lim. 7)**
C-M-22	-	Min. 1.5-inch *Insulation*	*Preliminarily Secured* or Secured with Top Layer	OPTIONAL *Cover Board*	*Preliminarily Secured*	*UltraPly TPO* (74-inch wide)	Heavy Duty Fasteners and 0.75" Polymer Batten Strips centered in-lap and fastened 6-inch o.c.; Fastener rows 68-inch o.c.; Min. 5-inch wide heat weld encapsulating plates and fasteners	**-82.5 (Lim. 7)**
C-M-23	(2) layers of V-Force Vapor Barrier Membrane installed as *Air Barrier*	OPTIONAL *Insulation*	*Preliminarily Secured* or Secured with Top Layer	Min. 3-inch *ISO*, *ISO CG* or ISOGARD HD Composite	*HD Fasteners & Insulation Plates* secured *6 per 4-ft x 8-ft board*	*UltraPly TPO* (148-inch wide)	Attached in-lap 12-inch o.c. with *HD Fasteners & Plates;* Side laps spaced 142-inch o.c.	**-82.5 (Lim. 7)**

Induction Welded Assemblies over *Concrete Deck* (New or Existing)								
System No.	Vapor Barrier	Base Insulation	Base Insulation Attachment	Top Insulation	Top Insulation Attachment	Membrane	Membrane Attachment	*MDP* (psf)
C-W-1	-	Min. 1.5-inch *Insulation*	*Preliminarily Secured* or secured with top layer	OPTIONAL *Cover Board*	*Invisiweld-S* fastened at a rate of *6 per 4 ft. x 8 ft. board;* Plate pattern offset 12-inches from each adjacent row of insulation boards	*UltraPly TPO*	Induction welded to Invisiweld-S plates	**-37.5 (Lim. 7 Non-HVHZ)**

This evaluation report is provided for State of Florida product approval under Rule 61G20-3. The manufacturer shall notify CREEK Technical Services, LLC of any product changes or quality assurance changes throughout the duration for which this report is valid. This evaluation report does not express nor imply warranty, installation, recommended use, or other product attributes that are not specifically addressed herein.

Induction Welded Assemblies over *Concrete Deck* (New or Existing)								
System No.	Vapor Barrier	Base Insulation	Base Insulation Attachment	Top Insulation	Top Insulation Attachment	Membrane	Membrane Attachment	*MDP* (psf)
C-W-2	-	Min. 1.5-inch *Insulation*	*Preliminarily Secured* or secured with top layer	OPTIONAL *Cover Board*	*Invisiweld-S II* fastened 12-inch o.c. in rows 5-ft o.c.	*UltraPly TPO*	Induction welded to Invisiweld-S plates	**-37.5 (Lim. 7 Non-HVHZ)**
C-W-3	-	Min. 1.5-inch *Insulation*	*Preliminarily Secured* or secured with top layer	OPTIONAL *Cover Board*	*Invisiweld-S* fastened at a rate of *8 per 4 ft. x 8 ft. board;* Plate pattern offset 12-inches from each adjacent row of insulation boards	*UltraPly TPO*	Induction welded to Invisiweld-S plates	**-45 (Lim. 7)**
C-W-4	-	Min. 1.5-inch *Insulation*	*Preliminarily Secured* or secured with top layer	OPTIONAL *Cover Board*	*Invisiweld-S II* fastened at a rate of 1 fastener per 6 ft^2 in a staggered, 2 ft x 3 ft grid	*UltraPly TPO*	Induction welded to Invisiweld-S plates	**-45 (Lim. 7; Non-HVHZ)**
C-W-5	-	Min. 1.5-inch *Insulation*	*Preliminarily Secured* or secured with top layer	OPTIONAL *Cover Board*	*InvisiWeld* fastened at a rate of *6 per 4 ft. x 8 ft. board;* Plate pattern offset 12-inches from each adjacent row of insulation boards	*UltraPly TPO*	Induction welded to InvisiWeld plates	**-45 (Lim. 7; Non-HVHZ)**
C-W-6	-	*Insulation*	*Preliminarily Secured* or secured with top layer	OPTIONAL *Cover Board*	*InvisiWeld* fastened at a rate of *8 per 4 ft. x 8 ft. board*	*UltraPly TPO*	Induction welded to InvisiWeld plates	**-45 (Lim. 7)**
C-W-7	V-Force Vapor Barrier Membrane installed as *Air Barrier*	OPTIONAL *Insulation*	*Preliminarily Secured* or secured with top layer	Min. 2.5-inch ISO 95-GL, *ISO CG* or *ISO HD-C*	*InvisiWeld* fastened at a rate of *8 per 4 ft. x 8 ft. board*	*UltraPly TPO*	Induction welded to InvisiWeld plates	**-52.5 (Lim. 7)**
C-W-8	V-Force Vapor Barrier Membrane installed as *Air Barrier* adhered over loose-laid *SECUROCK*	OPTIONAL *Insulation*	*Preliminarily Secured* or secured with top layer	Min. 2.5-inch ISO 95-GL, *ISO CG* or *ISO HD-C*	*InvisiWeld* fastened at a rate of *8 per 4 ft. x 8 ft. board*	*UltraPly TPO*	Induction welded to InvisiWeld plates	**-52.5 (Lim. 7)**

This evaluation report is provided for State of Florida product approval under Rule 61G20-3. The manufacturer shall notify CREEK Technical Services, LLC of any product changes or quality assurance changes throughout the duration for which this report is valid. This evaluation report does not express nor imply warranty, installation, recommended use, or other product attributes that are not specifically addressed herein.

Induction Welded Assemblies over *Concrete Deck* (New or Existing)								
System No.	Vapor Barrier	Base Insulation	Base Insulation Attachment	Top Insulation	Top Insulation Attachment	Membrane	Membrane Attachment	*MDP* (psf)
C-W-9	-	Min. 1.5-inch *Insulation*	*Preliminarily Secured* or secured with top layer	OPTIONAL *Cover Board*	*InvisiWeld* fastened at a rate of *8 per 4 ft. x 8 ft. board;* Plate pattern offset 12-inches from each adjacent row of insulation boards	*UltraPly TPO*	Induction welded to InvisiWeld plates	**-60 (Lim. 7)**
C-W-10	-	Min. 1.5-inch *Insulation*	*Preliminarily Secured* or secured with top layer	OPTIONAL *Cover Board*	*Invisiweld-S II* fastened at a rate of 1 fastener per 4 ft^2 in a staggered 2 ft x 2 ft grid	*UltraPly TPO*	Induction welded to Invisiweld-S plates	**-60 (Lim. 7)**
C-W-11	-	Min. 1-inch *Insulation*	*Preliminarily Secured* or secured with top layer	OPTIONAL *Cover Board*	*InvisiWeld* fastened 6-inch o.c. in rows 144-inch o.c.	*UltraPly TPO*	Induction welded to InvisiWeld plates	**-60 (Lim. 7)**
C-W-12	-	Min. 1.5-inch *Insulation*	*Preliminarily Secured* or secured with top layer	OPTIONAL *Cover Board*	*Invisiweld-S* fastened at a rate of *10 per 4 ft. x 8 ft. board;* Plate pattern offset 12-inches from each adjacent row of insulation boards	*UltraPly TPO*	Induction welded to Invisiweld-S plates	**-75 (Lim. 7)**
C-W-13	-	Min. 1.5-inch *Insulation*	*Preliminarily Secured* or secured with top layer	OPTIONAL *Cover Board*	*InvisiWeld* fastened at a rate of *12 per 4 ft. x 8 ft. board;* Plate pattern offset 12-inches from each adjacent row of insulation boards	*UltraPly TPO*	Induction welded to InvisiWeld plates	**-75 (Lim. 7)**
C-W-14	-	Min. 0.5-inch *Insulation*	*Preliminarily Secured* or secured with top layer	OPTIONAL *Cover Board*	*InvisiWeld* fastened at a rate of *12 per 4 ft. x 8 ft. board (Alt. Pattern)*	*UltraPly TPO*	Induction welded to InvisiWeld plates	**-75 (Lim. 7)**
C-W-15	-	Min. 1.5-inch *Insulation*	*Preliminarily Secured* or secured with top layer	OPTIONAL *Cover Board*	*Invisiweld-S II* fastened at a rate of 1 fastener per 3-ft^2 in a staggered 1.5 ft x 2 ft grid	*UltraPly TPO*	Induction welded to Invisiweld-S plates	**-82.5 (Lim. 7)**
C-W-16	-	Min. 1-inch *Insulation*	*Preliminarily Secured* or secured with top layer	OPTIONAL *Cover Board*	*InvisiWeld* fastened 6-inch o.c. in rows 72-inch o.c.	*UltraPly TPO*	Induction welded to InvisiWeld plates	**-60 (Lim. 7)**
C-W-17	-	Min. 1.5-inch *Insulation*	*Preliminarily Secured* or secured with top layer	OPTIONAL *Cover Board*	*Invisiweld-S II* fastened 6-inch o.c. in rows 60-inch o.c.	*UltraPly TPO*	Induction welded to Invisiweld-S plates	**-90 (Lim. 7)**

This evaluation report is provided for State of Florida product approval under Rule 61G20-3. The manufacturer shall notify CREEK Technical Services, LLC of any product changes or quality assurance changes throughout the duration for which this report is valid. This evaluation report does not express nor imply warranty, installation, recommended use, or other product attributes that are not specifically addressed herein.

Induction Welded Assemblies over *Concrete Deck* (New or Existing)								
System No.	Vapor Barrier	Base Insulation	Base Insulation Attachment	Top Insulation	Top Insulation Attachment	Membrane	Membrane Attachment	*MDP* (psf)
C-W-18	-	Min. 1.5-inch *Insulation*	*Preliminarily Secured* or secured with top layer	OPTIONAL *Cover Board*	*InvisiWeld* fastened at a rate of *16 per 4 ft. x 8 ft. board;* Plate pattern offset 12-inches from each adjacent row of insulation boards	*UltraPly TPO*	Induction welded to InvisiWeld plates	**-105 (Lim. 7)**

Assemblies with All Layers Adhered over Cementitious Wood Fiber Deck (New or Existing)							
System No.	Base Insulation	Base Insulation Attachment	Top Insulation	Top Insulation Attachment	Membrane	Membrane Attachment	*MDP* (psf)
CW-A-1	Min. 1-inch *ISO*	*Insulation Adhesive IV* ribbon adhered 12-inch o.c.	-	-	*UltraPly TPO*	*Membrane Adhesive V*	**-75 (Lim. 9)**
					UltraPly TPO FA	*Membrane Adhesive IV*	
					UltraPly TPO FSA	Self-adhered	
					UltraPly TPO SA (HVHZ ONLY)	Self-adhered	
					UltraPly TPO XR	*XR-S, TJ-R,* or I.S.O. Spray R ribbon adhered 12-inch o.c.; *JBSA* or *TJ-S*	
CW-A-2	Min. 0.5-inch *ISO*	*Insulation Adhesive IV* ribbon adhered 12-inch o.c.	Min. 0.5-inch *ISO*	*Insulation Adhesive IV* ribbon adhered 12-inch o.c.	*UltraPly TPO*	*Membrane Adhesive V*	**-92.5 (Lim. 9)**
					UltraPly TPO FA	*Membrane Adhesive IV*	
					UltraPly TPO FSA	Self-adhered	
					UltraPly TPO SA (HVHZ ONLY)	Self-adhered	
					UltraPly TPO XR	*XR-S, TJ-R,* or I.S.O. Spray R ribbon adhered 12-inch o.c.; *JBSA* or *TJ-S*	
CW-A-3	Min. 0.5-inch *ISO*	*Insulation Adhesive IX* ribbon adhered 6-inch o.c.	-	-	*UltraPly TPO*	*Membrane Adhesive V*	**-142.5 (Lim. 9)**
					UltraPly TPO FA	*Membrane Adhesive IV*	
					UltraPly TPO SA (HVHZ ONLY)	Self-adhered	
					UltraPly TPO XR	*XR-S, TJ-R* ribbon adhered 6-inch o.c. or I.S.O. Spray R ribbon adhered 12-inch o.c. or *JBSA*	

This evaluation report is provided for State of Florida product approval under Rule 61G20-3. The manufacturer shall notify CREEK Technical Services, LLC of any product changes or quality assurance changes throughout the duration for which this report is valid. This evaluation report does not express nor imply warranty, installation, recommended use, or other product attributes that are not specifically addressed herein.

Assemblies with All Layers Adhered over Cementitious Wood Fiber Deck (New or Existing)							
System No.	Base Insulation	Base Insulation Attachment	Top Insulation	Top Insulation Attachment	Membrane	Membrane Attachment	*MDP* (psf)
CW-A-4	Min. 300 psi Celcore MF with HS Rheology Admixture; Min. ¼-inch slurry coat	Poured in place	-	-	*UltraPly TPO*	UltraPly Bonding Adhesive	**-155 (Lim. 9)**
CW-A-5	Min. 300 psi Celcore MF with HS Rheology Admixture; Min. ¼-inch slurry coat	Poured in place	-	-	*UltraPly TPO XR*	*XR-S, TJ-R,* or I.S.O. Spray R ribbon adhered 12-inch o.c.; *HA; PermaMop; XR-BA;* or *TJ-S*	**-160 (Lim. 9)**
CW-A-6	Min. 0.5-inch *ISO*	*Insulation Adhesive IX* ribbon adhered 6-inch o.c.	*DensDeck Prime*	*Insulation Adhesive IX* ribbon adhered 6-inch o.c	*UltraPly TPO*	*Membrane Adhesive V*	**-160 (Lim. 9)**
					UltraPly TPO FA	*Membrane Adhesive IV*	
					UltraPly TPO SA (HVHZ ONLY)	Self-adhered	
					UltraPly TPO XR	*XR-S, TJ-R,* ribbon adhered 6-inch o.c.; I.S.O. Spray R ribbon adhered 12-inch o.c; *HA PermaMop; or XR-BA; JBSA* or *TJ-S*	

Assemblies Adhered Membranes over Cementitious Wood Fiber Deck (New, Existing, or *Recover*)							
System No.	Base Insulation/ Base Sheet	Base Insulation/ Base Sheet Attachment	Top Insulation	Top Insulation Attachment	Membrane	Membrane Attachment	*MDP* (psf)
CW-AM-1	SBS PolyBase Min. 3.4-inch laps	1.8" Two Piece Impact Nail attached 12-inch o.c. at the lap and 12-inch o.c. in two equally spaced, staggered rows in the field of the roll	-	-	*UltraPly TPO XR*	I.S.O. Spray R ribbon adhered 12-inch o.c.	**-52.5 (Lim. 7)**
CW-AM-2	SBS PolyBase Min. 3.4-inch laps	1.8" Two Piece Impact Nail attached 9-inch o.c. at the lap and 9-inch o.c. in two equally spaced, staggered rows in the field of the roll	-	-	*UltraPly TPO XR*	I.S.O. Spray R ribbon adhered 12-inch o.c.	**-67.5 (Lim. 7)**

This evaluation report is provided for State of Florida product approval under Rule 61G20-3. The manufacturer shall notify CREEK Technical Services, LLC of any product changes or quality assurance changes throughout the duration for which this report is valid. This evaluation report does not express nor imply warranty, installation, recommended use, or other product attributes that are not specifically addressed herein.

Assemblies Adhered Membranes over Cementitious Wood Fiber Deck (New, Existing, or *Recover*)							
System No.	Base Insulation/ Base Sheet	Base Insulation/ Base Sheet Attachment	Top Insulation	Top Insulation Attachment	Membrane	Membrane Attachment	*MDP* (psf)
CW-AM-3	SBS PolyBase Min. 3.4-inch laps	1.8" Two Piece Impact Nail attached 7-inch o.c. at the lap and 7-inch o.c. in two equally spaced, staggered rows in the field of the roll	-	-	*UltraPly TPO XR*	I.S.O. Spray R ribbon adhered 12-inch o.c.	**-90 (Lim. 7)**

Assemblies with All Layers Adhered over Gypsum Deck (New or Existing)							
System No.	Base Insulation	Base Insulation Attachment	Top Insulation	Top Insulation Attachment	Membrane	Membrane Attachment	*MDP* (psf)
G-A-1	Min. 1-inch ISO 95+ GL or *ISO CG*	I.S.O. Spray R Insulation Adhesive ribbon adhered 12-inch o.c.	-	-	*UltraPly TPO*	*Membrane Adhesive V*	**-135 (Lim. 9)**
					UltraPly TPO FA	*Membrane Adhesive IV*	
					UltraPly TPO SA (HVHZ ONLY)	Self-adhered	
					UltraPly TPO XR	*XR-S, TJ-R,* ribbon adhered 6-inch o.c., I.S.O. Spray R ribbon adhered 12-inch o.c., or *JBSA*	
G-A-2	*ISO HD*	I.S.O. Twin Pack or I.S.O. Spray R Insulation Adhesive ribbon adhered 12-inch o.c.	-	-	*UltraPly TPO or UltraPly TPO FA*	UltraPly Bonding Adhesive	**-230 (Lim. 9)**
					UltraPly TPO XR	*XR-S, TJ-R,* or I.S.O. Spray R ribbon adhered 6-inch o.c.; *JBSA* or *TJ-S*	
G-A-3	-	-	-	-	*UltraPly TPO XR*	*TJ-S*	**-272.5 (Lim. 9)**

This evaluation report is provided for State of Florida product approval under Rule 61G20-3. The manufacturer shall notify CREEK Technical Services, LLC of any product changes or quality assurance changes throughout the duration for which this report is valid. This evaluation report does not express nor imply warranty, installation, recommended use, or other product attributes that are not specifically addressed herein.

Gypsum Deck Assemblies with Adhered Membranes (New or Existing)							
System No.	Base Sheet or Insulation	Base Sheet or Insulation Attachment	Coverboard	Coverboard Attachment	Membrane	Membrane Attachment	*MDP* (psf)
G-AM-1	SBS Poly Torch Base; 6-inch wide torch adhered side laps	1.8" Trufast Twin Loc-Nail Batten Fastener and Trufast Twin Loc Coiled Batten Bar fastened 6-inch o.c. along the batten bar within the 33.4-inch o.c. spaced, torched side laps	-	-	*UltraPly TPO XR*	I.S.O. Spray R ribbon adhered 33.4-inch o.c. over base sheet torched side laps; *HA; PermaMop*	**-30 (Lim. 7; Non-HVHZ)**
G-AM-2	SBS Base; Min. 3.4-inch wide side laps	1.8" LWC Two-Piece Impact Nail attached 9-inch o.c. at the lap and 12-inch o.c. in two equally spaced, staggered rows in the field of the roll	Min. 1-inch *ISO* or *ISO CG*	I.S.O. Spray R ribbon adhered 12-inch o.c.	*UltraPly TPO*	*Membrane Adhesive V*	**-37.5 (Lim. 7; Non-HVHZ)**
					UltraPly TPO FA	*Membrane Adhesive IV*	
					UltraPly TPO XR	I.S.O. Spray R ribbon adhered 12-inch o.c.	

Lightweight Concrete Assemblies with All Layers Adhered over *Concrete Deck* (New or Existing)							
System No.	Vapor Barrier	*LWIC*	Insulation/Cover Board	Insulation/Cover Board Attachment	Membrane	Membrane Attachment	*MDP* (psf)
LC-A-1	-	Min. 350 psi Celcore MF with HS Rheology Admixture	-	-	*UltraPly TPO XR*	*XR-BA* or *TJ-S*	**-75 (Lim. 9)**
LC-A-2	-	Min. 200 psi Cellular Lightweight Concrete (MCRF ≥ 80 lbf using 1.7" LWC Base-Ply Fastener)	-	-	*UltraPly TPO*	UltraPly Bonding Adhesive	**-106.5 (Lim. 9)**
LC-A-3		Min. 200 psi Elastizell with Zell-Crete Fibers	-	-	*UltraPly TPO*	UltraPly Bonding Adhesive	**-115 (Lim. 9)**
LC-A-4		Min. 200 psi Elastizell with Zell-Crete Fibers	-	-	*UltraPly TPO XR*	*XR-S, TJ-R,* or I.S.O. Spray R ribbon adhered 12-inch o.c.; *HA; PermaMop; XR-BA;* or *TJ-S*	**-122.5 (Lim. 9)**
LC-A-5	-	Min. 200 psi Cellular Lightweight Concrete (MCRF ≥ 80 lbf using 1.7" LWC Base-Ply Fastener)	-	-	*UltraPly TPO XR*	*XR-S, TJ-R,* or I.S.O. Spray R ribbon adhered 12-inch o.c.; *HA; PermaMop; XR-BA;* or *TJ-S*	**-128 (Lim. 9)**
LC-A-6	OPTIONAL *SBS TA*	Min. 300 psi Celcore MF with HS Rheology Admixture	-	-	*UltraPly TPO*	UltraPly Bonding Adhesive	**-133.5 (Lim. 9)**

This evaluation report is provided for State of Florida product approval under Rule 61G20-3. The manufacturer shall notify CREEK Technical Services, LLC of any product changes or quality assurance changes throughout the duration for which this report is valid. This evaluation report does not express nor imply warranty, installation, recommended use, or other product attributes that are not specifically addressed herein.

Lightweight Concrete Assemblies with All Layers Adhered over *Concrete Deck* (New or Existing)							
System No.	Vapor Barrier	*LWIC*	Insulation/Cover Board	Insulation/Cover Board Attachment	Membrane	Membrane Attachment	*MDP* (psf)
LC-A-7	OPTIONAL *SBS TA*	Min. 300 psi Celcore MF with HS Rheology Admixture	*ISO HD*	*Insulation Adhesive IV* ribbon adhered 12-inch o.c.	*UltraPly TPO*	*Membrane Adhesive V*	**-133.5 (Lim. 9)**
					UltraPly TPO FA	*Membrane Adhesive IV*	
					UltraPly TPO SA (HVHZ ONLY)	Self-adhered	
					UltraPly TPO XR	*XR-S, TJ-R, or* I.S.O. Spray R ribbon adhered 12-inch o.c.; *JBSA* or *TJ-S*	
LC-A-8	-	Min. 300 psi Celcore MF with HS Rheology Admixture	*DensDeck Prime*	Insulation Adhesive VII ribbon adhered 12-inch o.c.	*UltraPly TPO*	*Membrane Adhesive V*	**-133.5 (Lim. 9)**
					UltraPly TPO FA	*Membrane Adhesive IV*	
					UltraPly TPO SA (HVHZ ONLY)	Self-adhered	
					UltraPly TPO XR	*XR-S, TJ-R, or* I.S.O. Spray R ribbon adhered 12-inch o.c.; *HA; PermaMop; XR-BA; JBSA* or *TJ-S*	
LC-A-9	-	Min. 350 psi Celcore MF with HS Rheology Admixture	Optional layer of Tapered *ISO* or *ISO CG* with Min. 2-inch *ISO HD-C*	I.S.O. Twin Pack Insulation Adhesive, I.S.O. Spray R, I.S.O. Stick, or Twin Jet ribbon adhered 12-inch o.c.	*UltraPly TPO*	Water Based Bonding Adhesive P	**-135 (Lim. 9)**
LC-A-10	-	Min. 350 psi Celcore MF with HS Rheology Admixture	Min. 1.5-inch *ISO* or *ISO CG* followed by optional layer of Tapered *ISO* or *ISO CG* with *ISO HD* or *DensDeck Prime*	I.S.O. Twin Pack Insulation Adhesive, I.S.O. Spray R, I.S.O. Stick, or Twin Jet ribbon adhered 12-inch o.c.	*UltraPly TPO*	Water Based Bonding Adhesive P	**-135 (Lim. 9)**
LC-A-11	-	Min. 300 psi Elastizell with Zell-Crete Fibers	-	-	*UltraPly TPO XR*	*XR-S, TJ-R, or* I.S.O. Spray R ribbon adhered 12-inch o.c.; *HA; PermaMop; XR-BA;* or *TJ-S*	**-136 (Lim. 9)**
LC-A-12	-	Min. 300 psi Celcore MF with HS Rheology Admixture	-	-	*UltraPly TPO XR*	*XR-S, TJ-R, or* I.S.O. Spray R ribbon adhered 12-inch o.c.; *HA; PermaMop; XR-BA;* or *TJ-S*	**-144.5 (Lim. 9)**

This evaluation report is provided for State of Florida product approval under Rule 61G20-3. The manufacturer shall notify CREEK Technical Services, LLC of any product changes or quality assurance changes throughout the duration for which this report is valid. This evaluation report does not express nor imply warranty, installation, recommended use, or other product attributes that are not specifically addressed herein.

Lightweight Concrete Assemblies with All Layers Adhered over *Concrete Deck* (New or Existing)							
System No.	Vapor Barrier	*LWIC*	Insulation/Cover Board	Insulation/Cover Board Attachment	Membrane	Membrane Attachment	*MDP* (psf)
LC-A-13	-	Min. 200 psi Cellular Lightweight Concrete (MCRF ≥ 80 lbf using 1.7" LWC Base-Ply Fastener)	*ISO HD*	*Insulation Adhesive IV* ribbon adhered 12-inch o.c.	*UltraPly TPO*	*Membrane Adhesive V*	**-150 (Lim. 9)**
					UltraPly TPO FA	*Membrane Adhesive IV*	
					UltraPly TPO SA (HVHZ ONLY)	Self-adhered	
					UltraPly TPO XR	*XR-S, TJ-R, or* I.S.O. Spray R ribbon adhered 12-inch o.c.; *JBSA* or *TJ-S*	
LC-A-14	-	Min. 200 psi Cellular Lightweight Concrete (MCRF ≥ 80 lbf using 1.7" LWC Base-Ply Fastener)	*DensDeck Prime*	*Insulation Adhesive VII* ribbon adhered 12-inch o.c.	*UltraPly TPO*	*Membrane Adhesive V*	**-150 (Lim. 9)**
					UltraPly TPO FA	*Membrane Adhesive IV*	
					UltraPly TPO SA (HVHZ ONLY)	Self-adhered	
					UltraPly TPO XR	*XR-S, TJ-R,* or I.S.O. Spray R ribbon adhered 12-inch o.c.; *HA; PermaMop; XR-BA; JBSA* or *TJ-S*	
LC-A-15		Min. 200 psi Elastizell with Zell-Crete Fibers	-	-	*UltraPly TPO or UltraPly TPO FA*	Single-Ply LVOC Bonding Adhesive	**-157.5 (Lim. 9)**
LC-A-16	-	Min. 300 psi Elastizell with Zell-Crete Fibers	*ISO HD*	*Insulation Adhesive IV* ribbon adhered 12-inch o.c.	*UltraPly TPO*	*Membrane Adhesive V*	**-157.5 (Lim. 9)**
					UltraPly TPO FA	*Membrane Adhesive IV*	
					UltraPly TPO SA (HVHZ ONLY)	Self-adhered	
					UltraPly TPO XR	*XR-S, TJ-R, or* I.S.O. Spray R ribbon adhered 12-inch o.c.; *JBSA* or *TJ-S*	
LC-A-17	-	Min. 300 psi Elastizell with Zell-Crete Fibers	*DensDeck Prime*	Insulation Adhesive VII ribbon adhered 12-inch o.c.	*UltraPly TPO*	*Membrane Adhesive V*	**-157.5 (Lim. 9)**
					UltraPly TPO FA	*Membrane Adhesive IV*	
					UltraPly TPO SA (HVHZ ONLY)	Self-adhered	
					UltraPly TPO XR	*XR-S, TJ-R,* or I.S.O. Spray R ribbon adhered 12-inch o.c.; *HA; PermaMop; XR-BA; JBSA* or *TJ-S*	

This evaluation report is provided for State of Florida product approval under Rule 61G20-3. The manufacturer shall notify CREEK Technical Services, LLC of any product changes or quality assurance changes throughout the duration for which this report is valid. This evaluation report does not express nor imply warranty, installation, recommended use, or other product attributes that are not specifically addressed herein.

Lightweight Concrete Assemblies with All Layers Adhered over *Concrete Deck* (New or Existing)							
System No.	Vapor Barrier	*LWIC*	Insulation/Cover Board	Insulation/Cover Board Attachment	Membrane	Membrane Attachment	*MDP* (psf)
LC-A-18	-	Min. 350 psi Celcore MF with HS Rheology Admixture	Min. 1-inch *ISO* with optional layer of Tapered *ISO*	I.S.O. Stick or Twin Jet ribbon adhered 12-inch o.c.	*UltraPly TPO* or *UltraPly TPO FA*	*Membrane Adhesive IV*	**-187.5 (Lim. 9)**
LC-A-19	-	Min. 350 psi Celcore MF with HS Rheology Admixture	Min. 1.5-inch *ISO CG* with optional layer of Tapered *ISO CG*	I.S.O. Stick or Twin Jet ribbon adhered 12-inch o.c.	*UltraPly TPO*	*Membrane Adhesive V*	**-187.5 (Lim. 9)**
LC-A-20	-	Min. 350 psi Celcore MF with HS Rheology Admixture	Optional layer of Tapered *ISO* or *ISO CG* with Min. 2-inch *ISO HD-C*	I.S.O. Stick or Twin Jet ribbon adhered 12-inch o.c.	*UltraPly TPO* or *UltraPly TPO FA*	*Membrane Adhesive I*	**-187.5 (Lim. 9)**
LC-A-21	-	Min. 350 psi Celcore MF with HS Rheology Admixture	Min. 1.5-inch *ISO* or *ISO CG* followed by optional layer of Tapered *ISO* or *ISO CG* with *ISO HD* or *DensDeck Prime*	I.S.O. Stick or Twin Jet ribbon adhered 12-inch o.c.	*UltraPly TPO* or *UltraPly TPO FA*	*Membrane Adhesive I*	**-187.5 (Lim. 9)**
LC-A-22	-	Min. 350 psi Celcore MF with HS Rheology Admixture	*DensDeck Prime*	I.S.O. Stick or Twin Jet ribbon adhered 12-inch o.c.	*UltraPly TPO XR*	*XR-BA* or *TJ-S*	**-187.5 (Lim. 9)**
LC-A-23	-	Min. 350 psi Celcore MF with HS Rheology Admixture	Min. 1-inch *ISO* with optional layer of Tapered *ISO*	I.S.O. Twin Pack Insulation Adhesive ribbon adhered 12-inch o.c.	*UltraPly TPO* or *UltraPly TPO FA*	*Membrane Adhesive IV*	**-217.5 (Lim. 9)**
LC-A-24	-	Min. 350 psi Celcore MF with HS Rheology Admixture	Optional layer of Tapered *ISO* or *ISO CG* with Min. 2-inch *ISO HD-C*	I.S.O. Twin Pack Insulation Adhesive ribbon adhered 12-inch o.c.	*UltraPly TPO* or *UltraPly TPO FA*	*Membrane Adhesive I*	**-217.5 (Lim. 9)**
LC-A-25	-	Min. 350 psi Celcore MF with HS Rheology Admixture	Min. 1.5-inch *ISO* or *ISO CG* followed by optional layer of Tapered *ISO* or *ISO CG* with *ISO HD* or *DensDeck Prime*	I.S.O. Twin Pack Insulation Adhesive ribbon adhered 12-inch o.c.	*UltraPly TPO* or *UltraPly TPO FA*	*Membrane Adhesive I*	**-217.5 (Lim. 9)**
LC-A-26	-	Min. 350 psi Celcore MF with HS Rheology Admixture	*DensDeck Prime*	I.S.O. Twin Pack Insulation Adhesive ribbon adhered 12-inch o.c.	*UltraPly TPO XR*	*XR-BA*	**-217.5 (Lim. 9)**
LC-A-27	-	Min. 350 psi Celcore MF with HS Rheology Admixture	Min. 1-inch *ISO CG* with optional layer of Tapered *ISO CG*	I.S.O. Twin Pack Insulation Adhesive ribbon adhered 12-inch o.c.	*UltraPly TPO* *UltraPly TPO FA*	*Membrane Adhesive V* *Membrane Adhesive IV*	**-217.5 (Lim. 9)**

This evaluation report is provided for State of Florida product approval under Rule 61G20-3. The manufacturer shall notify CREEK Technical Services, LLC of any product changes or quality assurance changes throughout the duration for which this report is valid. This evaluation report does not express nor imply warranty, installation, recommended use, or other product attributes that are not specifically addressed herein.

Lightweight Concrete Assemblies with All Layers Adhered over *Concrete Deck* (New or Existing)							
System No.	Vapor Barrier	*LWIC*	Insulation/Cover Board	Insulation/Cover Board Attachment	Membrane	Membrane Attachment	*MDP* (psf)
LC-A-28	-	Min. 150 psi Cellular Lightweight Concrete (MCRF ≥ 123 lbf using 1.7" LWC Base-Ply Fastener)	-	-	*UltraPly TPO* or *UltraPly TPO FA*	UltraPly Bonding Adhesive	**-222.5 (Lim. 9; HVHZ Only)**
LC-A-29	-	Min. 350 psi Celcore MF with HS Rheology Admixture	-	-	*UltraPly TPO* or *UltraPly TPO FA*	UltraPly Bonding Adhesive	**-247.5 (Lim. 9)**
LC-A-30	-	Min. 280 psi Celcore MF with HS Rheology Admixture	-	-	*UltraPly TPO XR*	*XR-S* or I.S.O. Spray R ribbon adhered 6-inch o.c.; *HA; PermaMop; XR-BA*	**-320 (Lim. 9 HVHZ Only)**
LC-A-31	-	Min. 280 psi Celcore MF with HS Rheology Admixture	-	-	*UltraPly TPO* or *UltraPly TPO FA*	UltraPly Bonding Adhesive	**-322.5 (Lim. 9 HVHZ Only)**
LC-A-33	-	Min. 360 psi Celcore MF with HS Rheology Admixture and Celcore S-1	-	-	*UltraPly TPO* or *UltraPly TPO FA*	UltraPly Bonding Adhesive	**-335 (Lim. 9)**
LC-A-34	*SBS TA*	Min. 300 psi Celcore MF with HS Rheology Admixture; Min. 0.25-inch slurry coat	-	-	*UltraPly TPO XR*	*XR-S* or I.S.O. Spray R ribbon adhered 12-inch o.c.; *HA; PermaMop; XR-BA;* or *TJ-S*	**-350 (Lim. 9)**
LC-A-35	-	Min. 350 psi Celcore MF with HS Rheology Admixture	-	-	*UltraPly TPO XR*	*XR-S* or I.S.O. Spray R ribbon adhered 12-inch o.c.; *HA; PermaMop; XR-BA;* or *TJ-S*	**-397.5 (Lim. 9)**
LC-A-36	*SBS TA*	Min. 300 psi Celcore MF with HS Rheology Admixture; Min. 0.25-inch slurry coat	-	-	*UltraPly TPO* or *UltraPly TPO FA*	UltraPly Bonding Adhesive	**-455 (Lim. 9)**

This evaluation report is provided for State of Florida product approval under Rule 61G20-3. The manufacturer shall notify CREEK Technical Services, LLC of any product changes or quality assurance changes throughout the duration for which this report is valid. This evaluation report does not express nor imply warranty, installation, recommended use, or other product attributes that are not specifically addressed herein.

Lightweight Concrete Assemblies with All Layers Adhered over *Steel Deck* (New or Existing)							
System No.	*Deck Detail*	*LWIC*	Insulation/ Cover Board	Insulation/Cover Board Attachment	Membrane	Membrane Attachment	*MDP* (psf)
LS-A-1	*G33, F1, L6, S12*	Min. 300 psi Celcore MF with HS Rheology	-	-	*UltraPly TPO XR*	*XR-S, TJ-R,* or I.S.O. Spray R ribbon adhered 12-inch o.c.; *HA; PermaMop; XR-BA;* or *TJ-S*	**-45 (Lim. 9)**
LS-A-2	*G33, F1, L6, S12*	Min. 300 psi Celcore MF with HS Rheology	*ISO HD*	*Insulation Adhesive IV* ribbon adhered 12-inch o.c.	*UltraPly TPO*	*Membrane Adhesive V*	**-45 (Lim. 9)**
					UltraPly TPO FA	*Membrane Adhesive IV*	
					UltraPly TPO FSA	Self-adhered	
					UltraPly TPO SA (HVHZ ONLY)	Self-adhered	
					UltraPly TPO XR	*XR-S, TJ-R* or I.S.O. Spray R ribbon adhered 12-inch o.c.; *JBSA* or *TJ-S*	
LS-A-3	*G33, F1, L6, S12*	Min. 300 psi Celcore MF with HS Rheology	*DensDeck Prime*	*Insulation Adhesive VII* ribbon adhered 12-inch o.c.	*UltraPly TPO*	*Membrane Adhesive V*	**-45 (Lim. 9)**
					UltraPly TPO FA	*Membrane Adhesive IV*	
					UltraPly TPO FSA	Self-adhered	
					UltraPly TPO SA (HVHZ ONLY)	Self-adhered	
					UltraPly TPO XR	*XR-S, TJ-R, or* I.S.O. Spray R ribbon adhered 12-inch o.c.; *HA; PermaMop; XR-BA; JBSA* or *TJ-S*	
LS-A-4	*G33, F1, L6*	Min. 300 psi Celcore MF with HS Rheology	-	-	*UltraPly TPO*	UltraPly Bonding Adhesive or Single-Ply LVOC Bonding Adhesive	**-45 (Lim. 9)**
LS-A-5	*G33, P, L6, S18*	Min. 310 psi Celcore MF with HS Rheology over deck treated with Celcore S-1	-	-	*UltraPly TPO XR*	*XR-BA; XR-S, TJ-R,* I.S.O. Spray R; or *TJ-S*	**-45 (Lim. 9)**
LS-A-6	*G33, F1W, L6, S12*	Min. 360 psi *LWIC (MCRF* ≥ 176 lbf with 1.7" LWC Base Ply Fastener); Polymer Batten Strip spaced 18-inch o.c. through fastened to *Steel Deck* 12-inch o.c. with Heavy Duty Fasteners	-	-	*UltraPly TPO XR*	*XR-S, TJ-R, or* I.S.O. Spray R ribbon adhered 6-inch o.c.; *HA; PermaMop; XR-BA;* or *TJ-S*	**-60 (Lim. 9)**

This evaluation report is provided for State of Florida product approval under Rule 61G20-3. The manufacturer shall notify CREEK Technical Services, LLC of any product changes or quality assurance changes throughout the duration for which this report is valid. This evaluation report does not express nor imply warranty, installation, recommended use, or other product attributes that are not specifically addressed herein.

Lightweight Concrete Assemblies with All Layers Adhered over *Steel Deck* (New or Existing)							
System No.	*Deck Detail*	*LWIC*	Insulation/ Cover Board	Insulation/Cover Board Attachment	Membrane	Membrane Attachment	*MDP* (psf)
LS-A-7	*G33, P, L5, S12*	Min. 350 psi Elastizell with Zell-Crete Fibers	-	-	*UltraPly TPO XR*	*XR-S, TJ-R, or* I.S.O. Spray R ribbon adhered 6-inch o.c.; *HA; PermaMop; XR-BA;* or *TJ-S*	**-60 (Lim. 9)**
LS-A-8	*G33, P, L6, S18*	Min. 360 psi Celcore MF with HS Rheology and Celcore S-1	-	-	*UltraPly TPO XR*	*XR-S, TJ-R,* or I.S.O. Spray R ribbons adhered 12-inch o.c.; *HA; PermaMop; XR-BA;* or *TJ-S*	**-60 (Lim. 9)**
LS-A-9	*G33, F1, L5*	Min. 300 psi Elastizell with Zell-Crete Fibers	-	-	*UltraPly TPO*	UltraPly Bonding Adhesive or Single-Ply LVOC Bonding Adhesive	**-67.5 (Lim. 9)**
LS-A-10	*G33, F1, L5, S6*	Min. 300 psi Elastizell with Zell-Crete Fibers	-	-	*UltraPly TPO XR*	*XR-S, TJ-R, or* I.S.O. Spray R ribbon adhered 12-inch o.c.; *HA; PermaMop; XR-BA;* or *TJ-S*	**-67.5 (Lim. 9)**
LS-A-11	*G33, F1, L5, S6*	Min. 300 psi Elastizell with Zell-Crete Fibers	*ISO HD*	*Insulation Adhesive IV* ribbon adhered 12-inch o.c.	*UltraPly TPO*	*Membrane Adhesive V*	**-67.5 (Lim. 9)**
					UltraPly TPO FA	*Membrane Adhesive IV*	
					UltraPly TPO FSA	Self-adhered	
					UltraPly TPO SA (HVHZ ONLY)	Self-adhered	
					UltraPly TPO XR	*XR-S, TJ-R, or* I.S.O. Spray R ribbon adhered 12-inch o.c.; or *JBSA*	
LS-A-12	*G33, F1, L5, S6*	Min. 300 psi Elastizell with Zell-Crete Fibers	*DensDeck Prime*	Insulation Adhesive VII ribbon adhered 12-inch o.c.	*UltraPly TPO*	*Membrane Adhesive V*	**-67.5 (Lim. 9)**
					UltraPly TPO FA	*Membrane Adhesive IV*	
					UltraPly TPO FSA	Self-adhered	
					UltraPly TPO SA (HVHZ ONLY)	Self-adhered	
					UltraPly TPO XR	*XR-S, TJ-R, or* I.S.O. Spray R ribbon adhered 12-inch o.c.; *HA; PermaMop; XR-BA; JBSA* or *TJ-S*	

This evaluation report is provided for State of Florida product approval under Rule 61G20-3. The manufacturer shall notify CREEK Technical Services, LLC of any product changes or quality assurance changes throughout the duration for which this report is valid. This evaluation report does not express nor imply warranty, installation, recommended use, or other product attributes that are not specifically addressed herein.

Lightweight Concrete Assemblies with All Layers Adhered over *Steel Deck* (New or Existing)							
System No.	*Deck Detail*	*LWIC*	Insulation/ Cover Board	Insulation/Cover Board Attachment	Membrane	Membrane Attachment	*MDP* (psf)
LS-A-13	*G33, P, L5, S18*	Min. 300 psi Celcore MF with HS Rheology and Celcore S-1	-	-	*UltraPly TPO*	UltraPly Bonding Adhesive	**-67.5 (Lim. 9)**
					UltraPly TPO XR	I.S.O. Spray R or *TJ-R* ribbon adhered 12-inch o.c.; or *TJ-S*	
LS-A-14	*G33, F1W, L6, S12*	Min. 300 psi Celcore MF with HS Rheology Admixture; Polymer Batten Strip spaced 18-inch o.c. through fastened to *Steel Deck* 12-inch o.c. with Heavy Duty Fasteners	-	-	*UltraPly TPO XR*	*XR-S, TJ-R,* or I.S.O. Spray R ribbon adhered 4-inch o.c.; *HA; PermaMop; XR-BA;* or *TJ-S*	**-75 (Lim. 9)**
LS-A-15	*G33, PW, L6, S18*	Min. 360 psi Celcore MF with HS Rheology over deck treated with Celcore S-1	-	-	*UltraPly TPO*	UltraPly Bonding Adhesive	**-82.5 (Lim. 9)**
LS-A-16	*G33, F1, L6, S12*	Min. 300 psi Celcore MF with HS Rheology Admixture *HD Fasteners & Plates* through-fastened to *Steel Deck* at a rate of one per 2 ft^2	-	-	*UltraPly TPO XR*	*XR-S, TJ-R,* or I.S.O. Spray R ribbon adhered 12-inch o.c.; *HA; PermaMop; XR-BA;* or *TJ-S*	**-90 (Lim. 9)**
LS-A-17	*G33, F1, L6, S12*	Min. 300 psi Celcore MF with HS Rheology *HD Fasteners & Plates* through-fastened to *Steel Deck* at a rate of one per 2 ft^2	*ISO HD*	*Insulation Adhesive IV* ribbon adhered 12-inch o.c.	*UltraPly TPO*	*Membrane Adhesive V*	**-90 (Lim. 9)**
					UltraPly TPO FA	*Membrane Adhesive IV*	
					UltraPly TPO FSA	Self-adhered	
					UltraPly TPO SA (HVHZ ONLY)	Self-adhered	
					UltraPly TPO XR	*XR-S, TJ-R, or* I.S.O. Spray R ribbon adhered 12-inch o.c.; *JBSA* or *TJ-S*	
LS-A-18	*G33, F1, L6, S12*	Min. 300 psi Celcore MF with HS Rheology *HD Fasteners & Plates* through-fastened to Steel Deck at a rate of one per 2 ft^2	*DensDeck Prime*	Insulation Adhesive VII ribbon adhered 12-inch o.c.	*UltraPly TPO*	*Membrane Adhesive V*	**-90 (Lim. 9)**
					UltraPly TPO FA	*Membrane Adhesive IV*	
					UltraPly TPO FSA	Self-adhered	
					UltraPly TPO SA (HVHZ ONLY)	Self-adhered	
					UltraPly TPO XR	*XR-S, TJ-R, or* I.S.O. Spray R ribbon adhered 12-inch o.c.; *HA; PermaMop; XR-BA; JBSA* or *TJ-S*	

This evaluation report is provided for State of Florida product approval under Rule 61G20-3. The manufacturer shall notify CREEK Technical Services, LLC of any product changes or quality assurance changes throughout the duration for which this report is valid. This evaluation report does not express nor imply warranty, installation, recommended use, or other product attributes that are not specifically addressed herein.

Lightweight Concrete Assemblies with All Layers Adhered over *Steel Deck* (New or Existing)							
System No.	*Deck Detail*	*LWIC*	Insulation/ Cover Board	Insulation/Cover Board Attachment	Membrane	Membrane Attachment	*MDP* (psf)
LS-A-19	*G33, P, L6, S18*	Min. 380 psi Celcore MF with HS Rheology and Celcore S-1	-	-	*UltraPly TPO XR*	*XR-S, TJ-R,* or I.S.O. Spray R ribbons spaced 4-inch o.c.; or *TJ-S*	**-90 (Lim. 9)**
LS-A-20	*G33, F1, L6*	Min. 300 psi Celcore MF with HS Rheology Admixture *HD Fasteners & Plates* through-fastened to *Steel Deck* at a rate of one per 2 ft^2	-	-	*UltraPly TPO*	UltraPly Bonding Adhesive or Single-Ply LVOC Bonding Adhesive	**-90 (Lim. 9)**
LS-A-21	*G33, P, L6, S18*	Min. 380 psi Celcore MF with HS Rheology over deck treated with Celcore S-1; Ceclore SBS applied over top coat	-	-	*UltraPly TPO XR*	I.S.O. Spray R ribbons spaced 4-inch o.c.; or *TJ-S*	**-90 (Lim. 9)**
LS-A-22	*G33, F1, L6*	Min. 300 psi Elastizell *HD Fasteners & Plates* through-fastened to Steel Deck at a rate of one per 2 ft^2	-	-	*UltraPly TPO*	UltraPly Bonding Adhesive	**-115 (Lim. 9)**
LS-A-23	*G33, F1, L6*	Min. 300 psi Elastizell *HD Fasteners & Plates* through-fastened to Steel Deck at a rate of one per 2 ft^2	-	-	*UltraPly TPO*	Single-Ply LVOC Bonding Adhesive	**-135 (Lim. 9)**
LS-A-24	*G33, F1, L6, S12*	Min. 300 psi Elastizell *HD Fasteners & Plates* through-fastened to Steel Deck at a rate of one per 2 ft^2	-	-	*UltraPly TPO XR*	*XR-S, TJ-R,* or I.S.O. Spray R ribbon adhered 12-inch o.c.; *HA; PermaMop; XR-BA;* or *TJ-S*	**-135 (Lim. 9)**
LS-A-25	*G33, F1, L6, S12*	Min. 300 psi Elastizell *HD Fasteners & Plates* through-fastened to Steel Deck at a rate of one per 2 ft^2	*ISO HD*	*Insulation Adhesive IV* ribbon adhered 12-inch o.c.	*UltraPly TPO*	*Membrane Adhesive V*	**-135 (Lim. 9)**
					UltraPly TPO FA	*Membrane Adhesive IV*	
					UltraPly TPO SA (HVHZ ONLY)	Self-adhered	
					UltraPly TPO XR	*XR-S, TJ-R, or* I.S.O. Spray R ribbon adhered 12-inch o.c.; *JBSA* or *TJ-S*	
LS-A-26	*G33, F1, L6, S12*	Min. 300 psi Elastizell *HD Fasteners & Plates* through-fastened to Steel Deck at a rate of one per 2 ft^2	*DensDeck Prime*	Insulation Adhesive VII ribbon adhered 12-inch o.c.	*UltraPly TPO*	*Membrane Adhesive V*	**-135 (Lim. 9)**
					UltraPly TPO FA	*Membrane Adhesive IV*	
					UltraPly TPO SA (HVHZ ONLY)	Self-adhered	
					UltraPly TPO XR	*XR-S, TJ-R, or* I.S.O. Spray R ribbon adhered 12-inch o.c.; *HA; PermaMop; XR-BA; JBSA* or *TJ-S*	

This evaluation report is provided for State of Florida product approval under Rule 61G20-3. The manufacturer shall notify CREEK Technical Services, LLC of any product changes or quality assurance changes throughout the duration for which this report is valid. This evaluation report does not express nor imply warranty, installation, recommended use, or other product attributes that are not specifically addressed herein.

Lightweight Concrete Assemblies with All Layers Adhered over *Steel Deck* (New or Existing)							
System No.	*Deck Detail*	*LWIC*	Insulation/ Cover Board	Insulation/Cover Board Attachment	Membrane	Membrane Attachment	*MDP* (psf)

This evaluation report is provided for State of Florida product approval under Rule 61G20-3. The manufacturer shall notify CREEK Technical Services, LLC of any product changes or quality assurance changes throughout the duration for which this report is valid. This evaluation report does not express nor imply warranty, installation, recommended use, or other product attributes that are not specifically addressed herein.

Lightweight Concrete Assemblies with Adhered Membranes (New or Existing)									
System No.	*Deck Detail*	*LWIC*	Base Sheet or Insulation	Base Sheet or Insulation Attachment	Coverboard	Coverboard Attachment	Membrane	Membrane Attachment	*MDP* (psf)
L-AM-1	*Steel Deck (G33, PW, L6, S18) Or Concrete Deck*	Min. 420 psi Celcore MF with HS Rheology (over deck treated with Celcore S-1 on steel deck only)	Channel Venting Base or SBS Base; Min. 3.5-inch wide side laps	1.8" LWC Two-Piece Impact Nail attached 9-inch o.c. at the lap and 9-inch o.c. in two equally spaced, staggered rows in the field of the roll	Min. 1-inch *ISO* or *ISO CG*	I.S.O. Spray R ribbon adhered 12-inch o.c.	*UltraPly TPO*	*Membrane Adhesive V*	**-37.5 (Lim. 7; Non-HVHZ)**
							UltraPly TPO FA	*Membrane Adhesive IV*	
							UltraPly TPO FSA	Self-adhered	
							UltraPly TPO XR	I.S.O. Spray R ribbon adhered 12-inch o.c.;	
L-AM-2	*Steel Deck (G33)* or *Concrete Deck*	Mearlcrete, Celcore, or Celcore MF with HS Rheology Admixture	*MA Base*	1.8-inch Two-Piece Impact Nail installed 7-inch o.c. in the 4-inch wide laps, 7-inch o.c. in two (2) staggered rows in the field	Min. 1-inch *ISO* or *ISO CG* installed followed by OPTIONAL Tapered *ISO* or Tapered *ISO CG* followed by OPTIONAL *ISO HD* or *DensDeck Prime*	*Insulation Adhesive* applied in ribbons spaced 12-inch o.c.	*UltraPly TPO*	*Membrane Adhesive V*	**-45 (Lim. 7)**
							UltraPly TPO FA	*Membrane Adhesive IV*	
							UltraPly TPO FSA	Self-adhered	
L-AM-3	*Steel Deck (G33, P, L5, S12W) or Concrete Deck*	Min. 220 psi Elastizell with Zell-Crete Fibers	SBS Base or SBS Poly Base with Min. 3.5-inch wide side laps	1.7" LWC Base Ply Fastener attached 9-inch o.c. at the lap and 9-inch o.c. in two equally spaced, staggered rows in the field of the roll	-	-	*UltraPly TPO XR*	ASTM D 312, Type IV Asphalt	**-45 (Lim. 7)**

This evaluation report is provided for State of Florida product approval under Rule 61G20-3. The manufacturer shall notify CREEK Technical Services, LLC of any product changes or quality assurance changes throughout the duration for which this report is valid. This evaluation report does not express nor imply warranty, installation, recommended use, or other product attributes that are not specifically addressed herein.

Lightweight Concrete Assemblies with Adhered Membranes (New or Existing)									
System No.	*Deck Detail*	*LWIC*	Base Sheet or Insulation	Base Sheet or Insulation Attachment	Coverboard	Coverboard Attachment	Membrane	Membrane Attachment	*MDP* (psf)
L-AM-4	*Steel Deck (G33, P, L6, S18) or Concrete Deck*	Min. 310 psi Celcore MF with HS Rheology (over deck treated with Celcore S-1 on steel deck only)	SBS Base Min. 3.4-inch wide side laps	1.8" Two Piece Impact Nail attached 12-inch o.c. at the lap and 12-inch o.c. in two equally spaced, staggered rows in the field of the roll	0.5-inch *ISO*	I.S.O. Spray R ribbons spaced 12-inch o.c.	*UltraPly TPO*	*Membrane Adhesive V*	**-45 (Lim. 7)**
							UltraPly TPO FA	*Membrane Adhesive IV*	
							UltraPly TPO FSA	Self-adhered	
							UltraPly TPO SA (HVHZ ONLY)	Self-Adhered	
							UltraPly TPO XR	*XR-S, TJ-R,* or I.S.O. Spray R ribbons spaced 12-inch o.c.; or *JBSA*	
L-AM-5	*Steel Deck (G33, P, L5, S18) or Concrete Deck*	Min. 300 psi Celcore MF with HS Rheology (over deck treated with Celcore S-1 on steel deck only)	SBS Base Min. 3.4-inch wide side laps	1.7" LWC Base Ply Fastener attached 9-inch o.c. at the lap and 9-inch o.c. in two equally spaced, staggered rows in the field of the roll	-	-	*UltraPly TPO XR*	I.S.O. Spray R ribbon adhered 12-inch o.c.; *HA;* or *PermaMop*	**-52.5 (Lim. 7)**
L-AM-6	*Steel Deck (G33, PW, L6, S18) Or Concrete Deck*	Min. 420 psi Celcore MF with HS Rheology (over deck treated with Celcore S-1 on steel deck only)	*MA Base;* Min. 4-inch wide side laps	1.7" LWC Base Ply Fastener attached 7-inch o.c. at the lap and 7-inch o.c. in two equally spaced, staggered rows in the field of the roll	-	-	*UltraPly TPO XR*	I.S.O. Spray R ribbon adhered 12-inch o.c.; *HA; PermaMop*	**-52.5 (Lim. 7)**
L-AM-7	*Steel Deck (G33, P, L5, S18) or Concrete Deck*	Min. 300 psi Celcore MF with HS Rheology (over deck treated with Celcore S-1 on steel deck only)	SBS PolyBase Min. 3.4-inch wide side laps	1.8" Two Piece Impact Nail attached 9-inch o.c. at the lap and 9-inch o.c. in two equally spaced, staggered rows in the field of the roll	-	-	*UltraPly TPO XR*	I.S.O. Spray R ribbon adhered 12-inch o.c.; *HA;* or *PermaMop*	**-60 (Lim. 7)**

This evaluation report is provided for State of Florida product approval under Rule 61G20-3. The manufacturer shall notify CREEK Technical Services, LLC of any product changes or quality assurance changes throughout the duration for which this report is valid. This evaluation report does not express nor imply warranty, installation, recommended use, or other product attributes that are not specifically addressed herein.

Lightweight Concrete Assemblies with Adhered Membranes (New or Existing)									
System No.	*Deck Detail*	*LWIC*	Base Sheet or Insulation	Base Sheet or Insulation Attachment	Coverboard	Coverboard Attachment	Membrane	Membrane Attachment	*MDP* (psf)
L-AM-8	*Steel Deck (G33, P, L6, S18) or Concrete Deck*	Min. 380 psi Celcore MF with HS Rheology (over deck treated with Celcore S-1 on steel deck only)	SBS Base Min. 3.4-inch wide side laps	1.8" Two Piece Impact Nail attached 7-inch o.c. at the lap and 7-inch o.c. in two equally spaced, staggered rows in the field of the roll	*SECUROCK*	I.S.O. Spray R ribbons spaced 12-inch o.c.	*UltraPly TPO*	*Membrane Adhesive V*	**-67.5 (Lim. 7)**
							UltraPly TPO FA	*Membrane Adhesive IV*	
							UltraPly TPO FSA	Self-adhered	
							UltraPly TPO SA (HVHZ ONLY)	Self-Adhered	
							UltraPly TPO XR	I.S.O. Spray R ribbon adhered 12-inch o.c.; *HA; PermaMop; XR-BA*	
L-AM-9	*Steel Deck (G33, P, L6, S18) or Concrete Deck*	Min. 400 psi Celcore MF with HS Rheology (over deck treated with Celcore S-1 on steel deck only)	SBS Base Min. 3.4-inch wide side laps	1.7" LWC Base Ply Fastener attached 7-inch o.c. at the lap and 7-inch o.c. in two equally spaced, staggered rows in the field of the roll	-	-	*UltraPly TPO XR*	I.S.O. Spray R ribbon adhered 12-inch o.c.; *HA; PermaMop*	**-67.5 (Lim. 7)**
L-AM-10	*Steel Deck (G33, P, L6, S18) or Concrete Deck*	Min. 360 psi Celcore MF with HS Rheology	Channel Venting Base Min. 3.4-inch wide side laps	1.8" Two Piece Impact Nail attached 7-inch o.c. at the lap and 7-inch o.c. in two equally spaced, staggered rows in the field of the roll	-	-	*UltraPly TPO XR*	I.S.O. Spray R ribbon adhered 12-inch o.c.; *HA; PermaMop*	**-75 (Lim. 7)**

Mechanically Fastened Lightweight Concrete Assemblies (New, Existing, or *Recover*)							
System No.	*Deck Detail*	*LWIC*	Base Sheet or Insulation	Base Sheet or Insulation Attachment	Membrane	Membrane Attachment	*MDP* (psf)
L-M-1	*Steel Deck (G33, HXE1, L6, HS12)*	Min. 200 psi Celcore MF with HS Rheology	OPTIONAL *Insulation*	-	*UltraPly TPO XR* (120-inch wide)	Attached in-lap 12-inch o.c. with *HD Fasteners & Plates*; Fastener rows 114-inch o.c.	**-30 (Lim. 7; Non-HVHZ)**
L-M-2	*Steel Deck (G33, HXE1, L6, HS12)*	Min. 200 psi Celcore MF with HS Rheology	OPTIONAL *Insulation*	-	*UltraPly TPO XR* (120-inch wide)	Attached in-lap 6-inch o.c. with *HD Fasteners & Plates*; Fastener rows 114-inch o.c.	**-45 (Lim. 7)**

This evaluation report is provided for State of Florida product approval under Rule 61G20-3. The manufacturer shall notify CREEK Technical Services, LLC of any product changes or quality assurance changes throughout the duration for which this report is valid. This evaluation report does not express nor imply warranty, installation, recommended use, or other product attributes that are not specifically addressed herein.

Mechanically Fastened Lightweight Concrete Assemblies (New, Existing, or *Recover*)							
System No.	*Deck Detail*	*LWIC*	Base Sheet or Insulation	Base Sheet or Insulation Attachment	Membrane	Membrane Attachment	*MDP* (psf)
L-M-3	*Steel Deck (G33, P, L6, S18) or Concrete Deck*	Min. 350 psi *LWIC*	OPTIONAL *Insulation*	-	Min. 60 mil UltraPly TPO (120-inch wide)	Attached in-lap 12-inch o.c. with *HD Fasteners & Plates*; Fastener rows 114-inch o.c.	**-45 (Lim. 7)**
L-M-4	*Steel Deck (G33, P, L6, S24)* or *Concrete Deck*	Min. 430 psi Celcore MF with HS Rheology over deck treated with Celcore S-1	Min. 0.5-inch *ISO*	-	*UltraPly TPO*	Backside of membrane primed with QuickPrime Plus Primer and adhered to UltraPly QuickSeam R.M.A Strip attached 72-inch o.c. and secured with *VERSA-FAST* spaced 6-inch o.c. with min. 3.25-inch fasteners at a rate of *2 fasteners per plate*	**-45 (Lim. 7)**
L-M-5	*Steel Deck (G33, F1, L5, S12) or Concrete Deck*	Min. 300 psi *LWIC*	OPTIONAL *Insulation*	-	*UltraPly TPO* (120-inch wide)	Attached in-lap 6-inch o.c. with *HD Fasteners & Plates*; Fastener rows 114-inch o.c.	**-52.5 (Lim. 7)**
L-M-6	*Steel Deck (G33, P, L6, S18) or Concrete Deck*	Min. 350 psi *LWIC*	OPTIONAL *Insulation*	-	Min. 60 mil UltraPly TPO (148-inch wide)	Attached in-lap 6-inch o.c. with *HD Fasteners & Plates*; Fastener rows 142-inch o.c.	**-52.5 (Lim. 7)**
L-M-7	*Steel Deck (G33, P, L6, S18) or Concrete Deck*	Min. 350 psi *LWIC*	OPTIONAL *Insulation*	-	Min. 60 mil UltraPly TPO (120-inch wide)	Attached in-lap 6-inch o.c. with *HD Fasteners & Plates*; Fastener rows 114-inch o.c.	**-67.5 (Lim. 7)**
L-M-8	*Steel Deck (G33, HXE1, L6, HS12)*	Min. 200 psi Celcore MF with HS Rheology	OPTIONAL *Insulation*	-	*UltraPly TPO* (96-inch wide)	Heavy Duty fasteners installed 6-inch through Polymer Batten Strip spaced 90-inch o.c. within the side laps; Side laps sealed with min. 5-inch weld that encapsulates the batten and fasteners	**-67.5 (Lim. 7)**
L-M-9	*Steel Deck (G33, HXE1, L6, HS12)*	Min. 200 psi Celcore MF with HS Rheology	OPTIONAL *Insulation*	-	*UltraPly TPO XR* (120-inch wide)	Attached in-lap 6-inch o.c. with *HD Plus Fasteners & Plates*; Fastener rows 114-inch o.c.	**-67.5 (Lim. 7)**
L-M-10	*Steel Deck (G33, P, L6, S18) or Concrete Deck*	Min. 380 psi Celcore MF with HS Rheology over deck treated with Celcore S-1 (steel deck only)	-	-	*UltraPly TPO*	Heavy Duty Fasteners and Coiled Metal Batten Bar secured in the lap 6-inch o.c. along the batten bar in rows spaced 142-inch o.c.; 5.5-inch wide heat weld at the 6-inch wide lap	**-67.5 (Lim. 7)**
L-M-11	*Steel Deck (G33, HXE1, L6, HS12)*	Min. 200 psi Celcore MF with HS Rheology	OPTIONAL *Insulation*	-	*UltraPly TPO* (96-inch wide)	Heavy Duty Plus fasteners installed 6-inch through Metal Batten Bar spaced 90-inch o.c. within the side laps; Side laps sealed with min. 5-inch weld that encapsulates the batten and fasteners	**-82.5 (Lim. 7)**

This evaluation report is provided for State of Florida product approval under Rule 61G20-3. The manufacturer shall notify CREEK Technical Services, LLC of any product changes or quality assurance changes throughout the duration for which this report is valid. This evaluation report does not express nor imply warranty, installation, recommended use, or other product attributes that are not specifically addressed herein.

Mechanically Fastened Lightweight Concrete Assemblies (New, Existing, or *Recover*)							
System No.	*Deck Detail*	*LWIC*	Base Sheet or Insulation	Base Sheet or Insulation Attachment	Membrane	Membrane Attachment	*MDP* (psf)
L-M-12	*Steel Deck (G33, F1, L6, S12W) or Concrete Deck*	Min. 200 psi *LWIC*	-	-	*UltraPly TPO*	Polymer Batten Strip spaced 4-ft o.c. through fastened to *Steel Deck* 6-inch o.c. with Heavy Duty Fasteners; 6-inch wide *UltraPly TPO* cover strip heat welded min. 1.5-inch wide on either side of battens	**-97.5 (Lim. 7)**
L-M-13	*Steel Deck (G33, F1, L6, S12W) or Concrete Deck*	Min. 200 psi *LWIC*	-	-	*UltraPly TPO XR*	Polymer Batten Strip spaced 4-ft o.c. through fastened to *Steel Deck* 6-inch o.c. with Heavy Duty Fasteners; 6-inch wide *UltraPly TPO* cover strip heat welded min. 1.5-inch wide on either side of battens	**-112.5 (Lim. 7)**

Induction Welded Assemblies over Lightweight Concrete (New or Existing)									
System No.	*Deck Detail*	*LWIC*	Base Sheet or Insulation	Base Sheet or Insulation Attachment	Coverboard	Coverboard Attachment	Membrane	Membrane Attachment	*MDP* (psf)
L-W-1	*Steel Deck (G33, HXE1, L6, HS12)*	Min. 200 psi Celcore MF with HS Rheology	-	-	-	-	*UltraPly TPO*	Induction Welded to *InvisiWeld* installed 18-inch o.c. in rows spaced 60-inch o.c.	**-30 (Lim. 7; Non-HVHZ)**
L-W-2	*Steel Deck (G33, HXE1, L6, HS12)*	Min. 200 psi Celcore MF with HS Rheology	-	-	-	-	*UltraPly TPO*	Induction Welded to *InvisiWeld* installed at a rate of 1 fastener per 5.33-ft^2	**-45 (Lim. 7; Non-HVHZ)**
L-W-3	*Steel Deck (G33, HXE1, L6, HS12)*	Min. 200 psi Celcore MF with HS Rheology	-	-	-	-	*UltraPly TPO*	Induction Welded to *InvisiWeld* installed at a rate of 1 fastener per 4-ft^2	**-60 (Lim. 7)**
L-W-4	*Steel Deck (G33, HXE1, L6, HS12)*	Min. 200 psi Celcore MF with HS Rheology	-	-	-	-	*UltraPly TPO*	Induction Welded to *InvisiWeld* installed at a rate of 1 fastener per 2.7-ft^2	**-75 (Lim. 7)**
L-W-5	*Steel Deck (G33, HXE1, L6, HS12)*	Min. 200 psi Celcore MF with HS Rheology	-	-	-	-	*UltraPly TPO*	In Induction Welded to *InvisiWeld* installed 6-inch o.c. in rows spaced 60-inch o.c.	**-75 (Lim. 7)**

This evaluation report is provided for State of Florida product approval under Rule 61G20-3. The manufacturer shall notify CREEK Technical Services, LLC of any product changes or quality assurance changes throughout the duration for which this report is valid. This evaluation report does not express nor imply warranty, installation, recommended use, or other product attributes that are not specifically addressed herein.

***Recover* Assemblies with All Layers Adhered**						
System No.	Existing Roof	Base Insulation	Top Insulation	Membrane	Membrane Attachment	*MDP* (psf)
R-A-1	Built-Up Roofing over *Concrete Deck*	-	-	UltraPly TPO XR 115 or UltraPly TPO XR 135	*XR-S* ribbon adhered 12-inch o.c.	**-112.5 (Lim. 9)**
R-A-2	Smooth or Mineral Surfaced BUR over *Concrete Deck*	Min. 0.5-inch *ISO* or Min. 1-inch *ISO CG* installed with I.S.O. Twin Pack applied in ribbons spaced 12-inch o.c	*SECUROCK* installed with I.S.O. Twin Pack applied in ribbons spaced 12-inch o.c	*UltraPly TPO*	*Membrane Adhesive V*	**-112.5 (Lim. 9)**
				UltraPly TPO FA	*Membrane Adhesive IV*	
				UltraPly TPO FSA	Self-adhered	
				UltraPly TPO SA (HVHZ ONLY)	Self-adhered	
R-A-3	Smooth or Mineral Surfaced BUR over *Concrete Deck*	Min. 0.5-inch *ISO* or Min. 1-inch *ISO CG* installed with I.S.O. Stick applied in ribbons spaced 12-inch o.c	*SECUROCK* installed with I.S.O. Stick applied in ribbons spaced 12-inch o.c	*UltraPly TPO*	*Membrane Adhesive V*	**-112.5 (Lim. 9)**
				UltraPly TPO FA	*Membrane Adhesive IV*	
				UltraPly TPO FSA	Self-adhered	
				UltraPly TPO SA (HVHZ ONLY)	Self-adhered	
R-A-4	Granule Surfaced SBS Modified Roofing over *Concrete Deck*	-	-	*UltraPly TPO XR*	*XR-S* ribbon adhered 12-inch o.c.	**-125.5 (Lim. 9)**
R-A-5	Smooth Surfaced BUR over *Concrete Deck*	Min. 0.5-inch *ISO* or Min. 1-inch *ISO CG* installed with I.S.O. Twin Pack applied in ribbons spaced 12-inch o.c	*DensDeck Prime* installed with I.S.O. Twin Pack applied in ribbons spaced 12-inch o.c	*UltraPly TPO*	*Membrane Adhesive V*	**-135 (Lim. 9)**
				UltraPly TPO FA	*Membrane Adhesive IV*	
R-A-6	Smooth Surfaced BUR over *Concrete Deck*	Min. 0.5-inch *ISO* or Min. 1-inch *ISO CG* installed with I.S.O. Stick applied in ribbons spaced 12-inch o.c	*DensDeck Prime* installed with I.S.O. Stick applied in ribbons spaced 12-inch o.c	*UltraPly TPO*	*Membrane Adhesive V*	**-135 (Lim. 9)**
				UltraPly TPO FA	*Membrane Adhesive IV*	
R-A-7	Smooth or Mineral Surfaced BUR over *Concrete Deck*	Min. 0.5-inch *ISO* or Min. 1-inch *ISO CG* installed with I.S.O. Twin Pack applied in ribbons spaced 12-inch o.c	Min 0.5-inch *ISO HD* installed with I.S.O. Twin Pack applied in ribbons spaced 12-inch o.c	*UltraPly TPO*	*Membrane Adhesive V*	**-135 (Lim. 9)**
				UltraPly TPO FA	*Membrane Adhesive IV*	
R-A-8	Smooth or Mineral Surfaced BUR over *Concrete Deck*	Min. 0.5-inch *ISO* or Min. 1-inch *ISO CG* installed with I.S.O. Stick applied in ribbons spaced 12-inch o.c	Min 0.5-inch *ISO HD* installed with I.S.O. Stick applied in ribbons spaced 12-inch o.c	*UltraPly TPO*	*Membrane Adhesive V*	**-135 (Lim. 9)**
				UltraPly TPO FA	*Membrane Adhesive IV*	
R-A-9	Smooth Surfaced BUR over *Concrete Deck*	Min. 1-inch *ISO CG* installed with I.S.O. Twin Pack applied in ribbons spaced 12-inch o.c	-	*UltraPly TPO*	*Membrane Adhesive V*	**-202.5 (Lim. 9)**
				UltraPly TPO FA	*Membrane Adhesive IV*	
R-A-10	Smooth Surfaced BUR over *Concrete Deck*	Min. 0.5-inch *ISO* or Min. 1-inch *ISO CG* installed with I.S.O. Twin Pack applied in ribbons spaced 12-inch o.c	OPTIONAL Min 0.5-inch *ISO HD* installed with I.S.O. Twin Pack applied in ribbons spaced 12-inch o.c	*UltraPly TPO* or *UltraPly TPO FA*	*Membrane Adhesive I*	**-202.5 (Lim. 9)**
				UltraPly TPO SA (HVHZ ONLY)	Self-adhered	

This evaluation report is provided for State of Florida product approval under Rule 61G20-3. The manufacturer shall notify CREEK Technical Services, LLC of any product changes or quality assurance changes throughout the duration for which this report is valid. This evaluation report does not express nor imply warranty, installation, recommended use, or other product attributes that are not specifically addressed herein.

***Recover* Assemblies with All Layers Adhered**						
System No.	Existing Roof	Base Insulation	Top Insulation	Membrane	Membrane Attachment	*MDP* (psf)
R-A-11	Smooth Surfaced BUR over *Concrete Deck*	Min. 0.5-inch *ISO* or Min. 1-inch *ISO CG* installed with I.S.O. Twin Pack applied in ribbons spaced 12-inch o.c	*DensDeck Prime* installed with I.S.O. Twin Pack applied in ribbons spaced 12-inch o.c	*UltraPly TPO* or *UltraPly TPO FA*	*Membrane Adhesive IV*	**-202.5 (Lim. 9)**
				UltraPly TPO SA (HVHZ ONLY)	Self-adhered	
R-A-12	Smooth Surfaced BUR over *Concrete Deck*	Min. 0.5-inch *ISO* or Min. 1-inch *ISO CG* installed with I.S.O. Twin Pack applied in ribbons spaced 12-inch o.c	Min. 7/16-inch OSB installed with I.S.O. Twin Pack applied in ribbons spaced 12-inch o.c	*UltraPly TPO*	*Membrane Adhesive II*	**-202.5 (Lim. 9; Non-HVHZ)**
				UltraPly TPO FA	*Membrane Adhesive I*	
R-A-13	Smooth or Mineral Surfaced BUR over *Concrete Deck*	Min. 0.5-inch *ISO* or Min. 1-inch *ISO CG* installed with I.S.O. Stick applied in ribbons spaced 12-inch o.c	Min 0.5-inch *ISO HD* installed with I.S.O. Stick applied in ribbons spaced 12-inch o.c	*UltraPly TPO* or *UltraPly TPO FA*	*Membrane Adhesive I*	**-225 (Lim. 9)**
R-A-14	Mineral Surfaced BUR over *Concrete Deck*	Min. 0.5-inch *ISO* or Min. 1-inch *ISO CG* installed with I.S.O. Twin Pack applied in ribbons spaced 12-inch o.c	Min 0.5-inch *ISO HD* installed with I.S.O. Twin Pack applied in ribbons spaced 12-inch o.c	*UltraPly TPO* or *UltraPly TPO FA*	*Membrane Adhesive I*	**-225 (Lim. 9)**
R-A-15	Smooth Surfaced BUR over *Concrete Deck*	Min. 1-inch *ISO CG* installed with I.S.O. Stick applied in ribbons spaced 12-inch o.c	-	*UltraPly TPO*	*Membrane Adhesive V*	**-247.5 (Lim. 9)**
				UltraPly TPO FA	*Membrane Adhesive IV*	
				UltraPly TPO SA (HVHZ ONLY)	Self-adhered	
R-A-16	Smooth Surfaced BUR over *Concrete Deck*	Min. 1-inch *ISO* installed with I.S.O. Stick applied in ribbons spaced 12-inch o.c	-	*UltraPly TPO* or *UltraPly TPO FA*	*Membrane Adhesive IV*	**-247.5 (Lim. 9)**
				UltraPly TPO SA (HVHZ ONLY)	Self-adhered	
R-A-17	Mineral Surfaced BUR over *Concrete Deck*	Min. 1-inch *ISO CG* installed with I.S.O. Twin Pack or I.S.O. Stick applied in ribbons spaced 12-inch o.c	-	*UltraPly TPO*	*Membrane Adhesive V*	**-247.5 (Lim. 9)**
				UltraPly TPO FA	*Membrane Adhesive IV*	
R-A-18	Mineral Surfaced BUR over *Concrete Deck*	Min. 0.5-inch *ISO* or Min. 1-inch *ISO CG* installed with I.S.O. Twin Pack applied in ribbons spaced 12-inch o.c	*DensDeck Prime* installed with I.S.O. Twin Pack applied in ribbons spaced 12-inch o.c	*UltraPly TPO* or *UltraPly TPO FA*	Fully adhered in UltraPly Bonding Adhesive, Single Ply LVOC Bonding Adhesive, or *JBSA*	**-247.5 (Lim. 9)**
				UltraPly TPO SA (HVHZ ONLY)	Self-adhered	
R-A-19	Mineral Surfaced BUR over *Concrete Deck*	Min. 0.5-inch *ISO* or Min. 1-inch *ISO CG* installed with I.S.O. Stick applied in ribbons spaced 12-inch o.c	*DensDeck Prime* installed with I.S.O. Stick applied in ribbons spaced 12-inch o.c	*UltraPly TPO* or *UltraPly TPO FA*	UltraPly Bonding Adhesive, Single Ply LVOC Bonding Adhesive, or *JBSA*	**-247.5 (Lim. 9)**

This evaluation report is provided for State of Florida product approval under Rule 61G20-3. The manufacturer shall notify CREEK Technical Services, LLC of any product changes or quality assurance changes throughout the duration for which this report is valid. This evaluation report does not express nor imply warranty, installation, recommended use, or other product attributes that are not specifically addressed herein.

***Recover* Assemblies with All Layers Adhered**						
System No.	Existing Roof	Base Insulation	Top Insulation	Membrane	Membrane Attachment	*MDP* (psf)
R-A-20	Smooth or Mineral Surfaced BUR over *Concrete Deck*	Min. 0.5-inch *ISO* or Min. 1-inch *ISO CG* installed with I.S.O. Stick applied in ribbons spaced 12-inch o.c	*DensDeck Prime* installed with I.S.O. Stick applied in ribbons spaced 12-inch o.c	*UltraPly TPO SA (HVHZ ONLY)*	Self-adhered	**-247.5 (Lim. 9)**
R-A-21	Smooth Surfaced BUR over *Concrete Deck*	Min. 0.5-inch *ISO* or Min. 1-inch *ISO CG* installed with I.S.O. Stick applied in ribbons spaced 12-inch o.c	*DensDeck Prime* installed with I.S.O. Stick applied in ribbons spaced 12-inch o.c	*UltraPly TPO* or *UltraPly TPO FA*	*Membrane Adhesive IV*	**-247.5 (Lim. 9)**
R-A-22	Smooth Surfaced BUR over *Concrete Deck*	Min. 0.5-inch *ISO* or Min. 1-inch *ISO CG* installed with I.S.O. Stick applied in ribbons spaced 12-inch o.c	Min 0.5-inch *ISO HD* installed with I.S.O. Stick applied in ribbons spaced 12-inch o.c	*UltraPly TPO*	UltraPly Bonding Adhesive or Single Ply LVOC Bonding Adhesive	**-247.5 (Lim. 9)**
				UltraPly TPO SA (HVHZ ONLY)	Self-adhered	
R-A-23	Mineral Surfaced BUR over *Concrete Deck*	Min. 0.5-inch *ISO* or Min. 1-inch *ISO CG* installed with I.S.O. Twin Pack applied in ribbons spaced 12-inch o.c	Min. 7/16-inch OSB installed with I.S.O. Twin Pack applied in ribbons spaced 12-inch o.c	*UltraPly TPO*	*Membrane Adhesive II*	**-247.5 (Lim. 9; Non-HVHZ)**
				UltraPly TPO FA	*Membrane Adhesive I*	
R-A-24	Mineral Surfaced BUR over *Concrete Deck*	Min. 0.5-inch *ISO* or Min. 1-inch *ISO CG* installed with I.S.O. Stick applied in ribbons spaced 12-inch o.c	Min. 7/16-inch OSB installed with I.S.O. Stick applied in ribbons spaced 12-inch o.c	*UltraPly TPO*	*Membrane Adhesive II*	**-247.5 (Lim. 9; Non-HVHZ)**
				UltraPly TPO FA	*Membrane Adhesive I*	
R-A-25	Mineral Surfaced BUR over *Concrete Deck*	Min. 1.0-inch *ISO CG* installed with I.S.O. Twin Pack or I.S.O. Stick applied in ribbons spaced 12-inch o.c	-	*UltraPly TPO* or *UltraPly TPO FA*	*Membrane Adhesive IV*	**-255 (Lim. 9)**
R-A-26	Mineral Surfaced BUR over *Concrete Deck*	Min. 1.0-inch *ISO* installed with I.S.O. Twin Pack applied in ribbons spaced 12-inch o.c	-	*UltraPly TPO* or *UltraPly TPO FA*	*Membrane Adhesive IV*	**-255 (Lim. 9)**
R-A-27	Mineral Surfaced BUR over *Concrete Deck*	Min. 0.5-inch *ISO* installed with I.S.O. Stick applied in ribbons spaced 12-inch o.c	-	*UltraPly TPO* or *UltraPly TPO FA*	*Membrane Adhesive IV*	**-255 (Lim. 9)**
R-A-28	Mineral Surfaced BUR over *Concrete Deck*	Min. 1-inch *ISO* or *ISO CG* installed with I.S.O. Twin Pack applied in ribbons spaced 12-inch o.c	-	*UltraPly TPO SA (HVHZ ONLY)*	Self-adhered	**-262.5 (Lim. 9)**
R-A-29	Mineral Surfaced BUR over *Concrete Deck*	Min. 1-inch *ISO CG* installed with I.S.O. Twin Pack applied in ribbons spaced 12-inch o.c	OPTIONAL Min 0.5-inch *ISO HD* installed with I.S.O. Twin Pack applied in ribbons spaced 12-inch o.c	*UltraPly TPO* or *UltraPly TPO FA*	Single Ply LVOC Bonding Adhesive or UltraPly Bonding Adhesive	**-262.5 (Lim. 9)**
R-A-30	Mineral Surfaced BUR over *Concrete Deck*	Min. 0.5-inch *ISO* or Min. 1-inch *ISO CG* installed with I.S.O. Stick applied in ribbons spaced 12-inch o.c	*DensDeck Prime* installed with I.S.O. Stick applied in ribbons spaced 12-inch o.c	*UltraPly TPO* or *UltraPly TPO FA*	Single Ply LVOC Bonding Adhesive 1168	**-262.5 (Lim. 9)**

This evaluation report is provided for State of Florida product approval under Rule 61G20-3. The manufacturer shall notify CREEK Technical Services, LLC of any product changes or quality assurance changes throughout the duration for which this report is valid. This evaluation report does not express nor imply warranty, installation, recommended use, or other product attributes that are not specifically addressed herein.

***Recover* Assemblies with All Layers Adhered**						
System No.	Existing Roof	Base Insulation	Top Insulation	Membrane	Membrane Attachment	*MDP* (psf)
R-A-31	Mineral Surfaced BUR over *Concrete Deck*	Min. 0.5-inch *ISO* or Min. 1-inch *ISO CG* installed with I.S.O. Twin Pack applied in ribbons spaced 12-inch o.c	*DensDeck Prime* installed with I.S.O. Twin Pack applied in ribbons spaced 12-inch o.c	*UltraPly TPO* or *UltraPly TPO FA*	Single Ply LVOC Bonding Adhesive 1168	**-262.5 (Lim. 9)**
R-A-32	Mineral Surfaced BUR over *Concrete Deck*	Min. 0.5-inch *ISO* or Min. 1-inch *ISO CG* installed with I.S.O. Twin Pack applied in ribbons spaced 12-inch o.c	Min 0.5-inch *ISO HD* installed with I.S.O. Twin Pack applied in ribbons spaced 12-inch o.c	*UltraPly TPO* or *UltraPly TPO FA*	UltraPly Bonding Adhesive or Single Ply LVOC Bonding Adhesive	**-262.5 (Lim. 9)**
				UltraPly TPO SA (HVHZ ONLY)	Self-adhered	
R-A-33	Mineral Surfaced BUR over *Concrete Deck*	Min. 0.5-inch *ISO* or Min. 1-inch *ISO CG* installed with I.S.O. Stick applied in ribbons spaced 12-inch o.c	Min 0.5-inch *ISO HD* installed with I.S.O. Stick applied in ribbons spaced 12-inch o.c	*UltraPly TPO* or *UltraPly TPO FA*	UltraPly Bonding Adhesive	**-300 (Lim. 9)**
				UltraPly TPO SA (HVHZ ONLY)	Self-adhered	
R-A-34	Built-Up Roofing over *Concrete Deck*	-	-	*UltraPly TPO XR*	I.S.O. Spray R ribbon adhered 4-inch o.c.	**-360 (Lim. 9)**
R-A-35	Mineral Surfaced BUR over *Concrete Deck*	Min. 0.5-inch *ISO* installed with I.S.O. Stick applied in ribbons spaced 12-inch o.c	-	*UltraPly TPO SA (HVHZ ONLY)*	Self-adhered	**-337.5 (Lim. 9)**
R-A-36	Mineral Surfaced BUR over *Concrete Deck*	Min. 1-inch *ISO CG* installed with I.S.O. Stick applied in ribbons spaced 12-inch o.c	-	*UltraPly TPO SA (HVHZ ONLY)*	Self-adhered	**-352.5 (Lim. 9)**
R-A-37	Mineral Surfaced BUR over *Concrete Deck*	Min. 1-inch *ISO CG* installed with I.S.O. Stick applied in ribbons spaced 12-inch o.c	OPTIONAL Min 0.5-inch *ISO HD* installed with I.S.O. Stick applied in ribbons spaced 12-inch o.c	*UltraPly TPO* or *UltraPly TPO FA*	Single Ply LVOC Bonding Adhesive or UltraPly Bonding Adhesive	**-352.5 (Lim. 9)**
R-A-38	Mineral Surfaced BUR over *Concrete Deck*	Min. 0.5-inch *ISO* installed with I.S.O. Stick applied in ribbons spaced 12-inch o.c	Min 0.5-inch *ISO HD* installed with I.S.O. Stick applied in ribbons spaced 12-inch o.c	*UltraPly TPO* or *UltraPly TPO FA*	Single Ply LVOC Bonding Adhesive or UltraPly Bonding Adhesive	**-352.5 (Lim. 9)**
R-A-39	Granule Surfaced SBS Modified Roofing over *Concrete Deck*	-	-	UltraPly TPO XR 115 or UltraPly TPO XR 135	*XR-S* ribbon adhered 12-inch o.c.	**-392.5 (Lim. 9)**
R-A-40	Granule Surfaced APP Modified Roofing over *Concrete Deck*	-	-	UltraPly TPO XR 115 or UltraPly TPO XR 135	*XR-S* ribbon adhered 12-inch o.c.	**-422.5 (Lim. 9)**

This evaluation report is provided for State of Florida product approval under Rule 61G20-3. The manufacturer shall notify CREEK Technical Services, LLC of any product changes or quality assurance changes throughout the duration for which this report is valid. This evaluation report does not express nor imply warranty, installation, recommended use, or other product attributes that are not specifically addressed herein.

***Recover* Assemblies with Adhered Membranes**								
System No.	*Deck Detail*	Insulation or Base	Insulation or Base Attachment	Coverboard	Coverboard Attachment	Membrane	Membrane Attachment	*MDP* (psf)
R-AM-1	Gypsum Deck	SBS Poly Torch Base; 6-inch wide torch adhered side laps	Trufast Twin Loc-Nail Batten Fastener with min. 1.8" penetration into gypsum deck and Trufast Twin Loc Coiled Batten Bar fastened 6-inch o.c. along the batten bar within the 33.4-inch o.c. spaced, torched side laps	-	-	*UltraPly TPO XR*	I.S.O. Spray R ribbon adhered 33.4-inch o.c. over base sheet torched side laps; *HA; PermaMop*	**-30 (Lim. 7; Non-HVHZ)**
R-AM-2	Min. 420 psi Celcore MF with HS Rheology LWIC over *Steel Deck (G33, PW, L6, S18)* or *Concrete Deck*	Channel Venting Base or SBS Base; Min. 3.5-inch wide side laps	Two Piece Impact Nail with min. 1.8" penetration into LWIC attached 9-inch o.c. at the lap and 9-inch o.c. in two equally spaced, staggered rows in the field of the roll	Min. 1-inch *ISO* or *ISO CG*	I.S.O. Spray R ribbon adhered 12-inch o.c.	*UltraPly TPO*	*Membrane Adhesive V*	**-37.5 (Lim. 7; Non-HVHZ)**
						UltraPly TPO FA	*Membrane Adhesive IV*	
						UltraPly TPO FSA	Self-adhered	
						UltraPly TPO XR	I.S.O. Spray R ribbon adhered 12-inch o.c.	
R-AM-3	Min. 310 psi Celcore MF with HS Rheology LWIC over *Steel Deck (G33, P, L6, S18)* or *Concrete Deck*	SBS Base Min. 3.4-inch wide side laps	Two Piece Impact Nail with min. 1.8" penetration into LWIC attached 12-inch o.c. at the lap and 12-inch o.c. in two equally spaced, staggered rows in the field of the roll	0.5-inch *ISO*	I.S.O. Spray R ribbons spaced 12-inch o.c.	*UltraPly TPO*	*Membrane Adhesive V*	**-45 (Lim. 7)**
						UltraPly TPO FA	*Membrane Adhesive IV*	
						UltraPly TPO FSA	Self-adhered	
						UltraPly TPO SA (HVHZ ONLY)	Self-Adhered	
						UltraPly TPO XR	*XR-S, TJ-R,* or I.S.O. Spray R ribbons spaced 12-inch o.c.; *JBSA* or *TJ-S*	
R-AM-4	Min. 3-inch *CWF Deck*	SBS PolyBase Min. 3.4-inch wide side laps	Two Piece Impact Nail with min. 1.8" penetration into CWF attached 12-inch o.c. at the lap and 12-inch o.c. in two equally spaced, staggered rows in the field of the roll	-	-	*UltraPly TPO XR*	I.S.O. Spray R ribbon adhered 12-inch o.c.; *HA;* or *PermaMop*	**-52.5 (Lim. 7)**

This evaluation report is provided for State of Florida product approval under Rule 61G20-3. The manufacturer shall notify CREEK Technical Services, LLC of any product changes or quality assurance changes throughout the duration for which this report is valid. This evaluation report does not express nor imply warranty, installation, recommended use, or other product attributes that are not specifically addressed herein.

***Recover* Assemblies with Adhered Membranes**								
System No.	*Deck Detail*	Insulation or Base	Insulation or Base Attachment	Coverboard	Coverboard Attachment	Membrane	Membrane Attachment	*MDP* (psf)
R-AM-5	Min. 382 psi Celcore MF with HS Rheology LWIC over *Steel Deck (G33, P, L6, S18)* or *Concrete Deck*	SBS Base Min. 3.4-inch wide side laps	Two Piece Impact Nail with min. 1.8" penetration into LWIC attached 7-inch o.c. at the lap and 7-inch o.c. in two equally spaced, staggered rows in the field of the roll	*SECUROCK*	I.S.O. Spray R ribbons spaced 12-inch o.c.	*UltraPly TPO*	*Membrane Adhesive V*	**-67.5 (Lim. 7)**
						UltraPly TPO FA	*Membrane Adhesive IV*	
						UltraPly TPO FSA	Self-adhered	
						UltraPly TPO SA (HVHZ ONLY)	Self-Adhered	
						UltraPly TPO XR	I.S.O. Spray R or *TJ-R* ribbon adhered 12-inch o.c.; *HA; PermaMop; XR-BA; JBSA* or *TJ-S*	
R-AM-6	Min. 360 psi Celcore MF with HS Rheology LWIC over *Steel Deck (G33, P, L6, S18)* or *Concrete Deck*	Channel Venting Base Min. 3.4-inch wide side laps	Two Piece Impact Nail with min. 1.8" penetration into attached 7-inch o.c. at the lap and 7-inch o.c. in two equally spaced, staggered rows in the field of the roll	-	-	*UltraPly TPO XR*	I.S.O. Spray R ribbon adhered 12-inch o.c.; *HA;* or *PermaMop*	**-75 (Lim. 7)**

Mechanically Fastened *Recover* Assemblies								
System No.	*Deck Detail*	Insulation or Base	Insulation or Base Attachment	Coverboard	Coverboard Attachment	Membrane	Membrane Attachment	*MDP* (psf)
R-M-1	*Wood Deck (T15/32, L24, N6)*	Min. 0.5-inch *Insulation*	*Preliminarily Secured*	-	-	*UltraPly TPO*	UltraPly QuickSeam R.M.A Strip attached 8-ft o.c. and secured with All Purpose Fasteners 6-inch o.c. through the Polymer Batten Strip	**-30 (Lim. 7; Non-HVHZ)**
R-M-2	*Steel Deck (G33, L6, S24)* or *Concrete Deck*	OPTIONAL *Insulation*	*Preliminarily Secured*	-	-	*UltraPly TPO* (120-inch wide)	Attached in-lap 12-inch o.c. with *HD Fasteners & Plates;* Side laps spaced 114-inch o.c.	**-30 (Lim. 7; Non-HVHZ)**
R-M-3	*Steel Deck (G33, P, L6)*	OPTIONAL *Insulation*	*Preliminarily Secured*	-	-	*UltraPly TPO* (96-inch wide)	Attached in-lap 12-inch o.c. with *HD Plus Fasteners & Plates*; Fastener rows 90-inch o.c.	**-45 (Lim. 7)**
R-M-4	*Steel Deck (G80, F1, L6, S24)*	OPTIONAL *Insulation*	*Preliminarily Secured*	-	-	*UltraPly TPO* (120-inch wide)	Attached in-lap 12-inch o.c. with *HD Plus Fasteners & Plates*; Fastener rows 114-inch o.c.	**-45 (Lim. 7)**

This evaluation report is provided for State of Florida product approval under Rule 61G20-3. The manufacturer shall notify CREEK Technical Services, LLC of any product changes or quality assurance changes throughout the duration for which this report is valid. This evaluation report does not express nor imply warranty, installation, recommended use, or other product attributes that are not specifically addressed herein.

Mechanically Fastened *Recover* Assemblies								
System No.	*Deck Detail*	Insulation or Base	Insulation or Base Attachment	Coverboard	Coverboard Attachment	Membrane	Membrane Attachment	*MDP* (psf)
R-M-5	*Steel Deck (G80, F1, L6, S24)*	OPTIONAL *Insulation*	*Preliminarily Secured*	-	-	*UltraPly TPO* (96-inch wide)	Attached in-lap 12-inch o.c. with *HD Fasteners & Plates*; Fastener rows 90-inch o.c.	**-45 (Lim. 7**
R-M-6	*Wood Deck (T19/32, L24, N6)*	*DensDeck* or *SECUROCK*	*Preliminarily Secured*	-	-	Min. 60 mil UltraPly TPO (120-inch wide)	Attached in-lap 5-inch o.c. with *HD Fasteners & Plates*; Fastener rows 114-inch o.c.	**-45 (Lim. 7)**
R-M-7	Min. 200 psi *LWIC* over *Steel Deck (G33, P, L5, S12)*	*Insulation*	*Preliminarily Secured*	-	-	*UltraPly TPO* (120-inch wide)	Attached in-lap 6-inch o.c. with *HD Fasteners & Plates*; Fastener rows 114-inch o.c.	**-45 (Lim. 7)**
R-M-8	Min. 300 psi *LWIC* over *Steel Deck (G33, F1, L5, S12)*	*Insulation*	*Preliminarily Secured*	-	-	*UltraPly TPO* (120-inch wide)	Attached in-lap 6-inch o.c. with *HD Fasteners & Plates*; Fastener rows 114-inch o.c.	**-52.5 (Lim. 7)**
R-M-9	*Steel Deck (G80, F1, L6, S24)* or *Concrete Deck*	OPTIONAL *Insulation*	*Preliminarily Secured*	-	-	*UltraPly TPO* (148-inch wide)	Attached in-lap 6-inch o.c. with *HD Fasteners & Plates*; Fastener rows 142-inch o.c.	**-52.5 (Lim. 7)**
R-M-10	*Steel Deck (G33, F1, L6, S24)*	OPTIONAL *Insulation*	*Preliminarily Secured*	-	-	*UltraPly TPO* (148-inch wide)	Attached in-lap 6-inch o.c. with *HD Plus Fasteners & Plates*; Fastener rows 142-inch o.c.	**-60 (Lim. 7)**
R-M-11	*Steel Deck (G33, P, L6, S24)* or *Concrete Deck*	OPTIONAL *Insulation*	*Preliminarily Secured*	-	-	*UltraPly TPO* (96-inch wide)	Attached in-lap 6-inch o.c. with *HD Fasteners & Plates*; Fastener rows 89-inch o.c.; 7-inch wide side laps	**-60 (Lim. 7)**
R-M-12	*Steel Deck (G33, P, L6, S12W) or Concrete Deck*	OPTIONAL *Insulation*	*Preliminarily Secured*	-	-	Min. 60 mil UltraPly TPO (120-inch wide)	Attached in-lap 6-inch o.c. with *HD Fasteners & Plates*; Fastener rows 114-inch o.c.	**-60 (Lim. 7)**
R-M-13	*Steel Deck (G33, F1, L6, S24)* or *Concrete Deck*	OPTIONAL *Insulation*	*Preliminarily Secured*	-	-	*UltraPly TPO* (120-inch wide)	Attached in-lap 6-inch o.c. with *HD Plus Fasteners & Plates*; Fastener rows 114-inch o.c.	**-67.5 (Lim. 7)**
R-M-14	*Steel Deck (G33, P, L6)* or *Concrete Deck*	OPTIONAL *Insulation*	*Preliminarily Secured*	-	-	*UltraPly TPO* (120-inch wide)	Attached in-lap 6-inch o.c. with *HD Plus Fasteners & Plates*; Fastener rows 114-inch o.c.	**-67.5 (Lim. 7)**
R-M-15	*Steel Deck (G80, F2, L6, S24)* or *Concrete Deck*	OPTIONAL *Insulation*	*Preliminarily Secured*	-	-	*UltraPly TPO* (74-inch wide)	Heavy Duty Fasteners and 0.75" Polymer Batten Strips centered in-lap and fastened 6-inch o.c.; Fastener rows 68-inch o.c.; Min. 5-inch wide heat weld encapsulating plates and fasteners	**-82.5 (Lim. 7)**
R-M-16	Min. 300 psi *LWIC* over *Steel Deck (G33, P, L5, S18)* or *Concrete Deck*	OPTIONAL *Insulation*	*Preliminarily Secured*	-	-	*UltrpPly TPO XR*	*HD Fasteners & Plates* through-fastened 6-inches o.c in 5-inch wide inverted strips of *TPO XR* spaced 6-ft o.c.; I.S.O. Spray R ribbon adhered to each base strip	**-90 (Lim. 7)**

This evaluation report is provided for State of Florida product approval under Rule 61G20-3. The manufacturer shall notify CREEK Technical Services, LLC of any product changes or quality assurance changes throughout the duration for which this report is valid. This evaluation report does not express nor imply warranty, installation, recommended use, or other product attributes that are not specifically addressed herein.

Mechanically Fastened *Recover* Assemblies								
System No.	*Deck Detail*	Insulation or Base	Insulation or Base Attachment	Coverboard	Coverboard Attachment	Membrane	Membrane Attachment	*MDP* (psf)
R-M-17	*Steel Deck (G80, F2, L6, S24)* or *Concrete Deck*	OPTIONAL *Insulation*	*Preliminarily Secured*	-	-	*UltraPly TPO* (148-inch wide)	Heavy Duty Plus Fasteners and 0.75" Polymer Batten Strips centered in-lap and fastened 6-inch o.c.; Intermediate row in field of sheet with fasteners 6-inch o.c.; Fastener rows spaced 71-inch o.c.; Min. 5-inch wide heat weld encapsulating plates and fasteners in-lap; 5-inch wide *UltraPly TPO* cover strip heat welded 1.5-inch wide on either side of battens in field row	**-135 (Lim. 7)**

Induction Welded *Recover* Assemblies						
System No.	Existing Roof	Insulation	Insulation Attachment	Membrane	Membrane Attachment	*MDP* (psf)
R-W-1	*Wood Deck (T19/32, L24)*	*DensDeck* or *SECUROCK*	*InvisiWeld* fastened at a rate of *6 per 4 ft. x 8 ft. board*	*UltraPly TPO*	Induction welded to InvisiWeld plates	**-30 (Lim. 7; Non-HVHZ)**
R-W-2	*Steel Deck* or *Concrete Deck*	Max. 1-inch *Insulation* (length shall be perpendicular to deck ribs)	*InvisiWeld* fastened at a rate of *6 per 4 ft. x 8 ft. board;* Plate pattern offset 12-inches from each adjacent row of insulation boards	*UltraPly TPO*	Induction welded to InvisiWeld plates	**-45 (Lim. 7; Non-HVHZ)**
R-W-3	*Steel Deck (G33, P, L6, S24)* or *Concrete Deck*	*Insulation*	*InvisiWeld* fastened at a rate of *8 per 4 ft. x 8 ft. board*	*UltraPly TPO*	Induction welded to InvisiWeld plates	**-45 (Lim. 7)**
R-W-4	Existing metal roof having 0.25 to 3/16-inch thick steel purlins at max. 10 ft. o.c.	Min. 1-inch *ISO* fill layer with Min. 0.25-inch *Insulation* over fill	Secured to purlins with UltraPly TPO InvisiWeld Plates and Purlin Fasteners spaced max. 6-inch o.c. in max. 10 ft. fastener rows	*UltraPly TPO*	Induction welded to InvisiWeld plates	**-52.5 (Lim. 7)**
R-W-5	*Wood Deck (T19/32, L24)*	*DensDeck* or *SECUROCK*	*InvisiWeld* fastened at a rate of *8 per 4 ft. x 8 ft. board*	*UltraPly TPO*	Induction welded to InvisiWeld plates	**-52.5 (Lim. 9)**
R-W-6	*Wood Deck (T19/32, L24, N6)*	*DensDeck* or *SECUROCK*	*InvisiWeld* fastened at a rate of *12 per 4 ft. x 8 ft. board*	*UltraPly TPO*	Induction welded to InvisiWeld plates	**-52.5 (Lim. 7)**
R-W-7	*Steel Deck (G33, F1, L6, S30)* or *Concrete Deck*	Max. 1-inch *Insulation* (length shall be perpendicular to deck ribs)	*InvisiWeld* fastened at a rate of *8 per 4 ft. x 8 ft. board;* Plate pattern offset 12-inches from each adjacent row of insulation boards	*UltraPly TPO*	Induction welded to InvisiWeld plates	**-60 (Lim. 7)**

This evaluation report is provided for State of Florida product approval under Rule 61G20-3. The manufacturer shall notify CREEK Technical Services, LLC of any product changes or quality assurance changes throughout the duration for which this report is valid. This evaluation report does not express nor imply warranty, installation, recommended use, or other product attributes that are not specifically addressed herein.

Induction Welded *Recover* Assemblies						
System No.	Existing Roof	Insulation	Insulation Attachment	Membrane	Membrane Attachment	*MDP* (psf)
R-W-8	*Steel Deck (G33, F1, L6, S30)* or *Concrete Deck*	Max. 1-inch *Insulation* (length shall be perpendicular to deck ribs)	*InvisiWeld* fastened at a rate of *12 per 4 ft. x 8 ft. board;* Plate pattern offset 12-inches from each adjacent row of insulation boards	*UltraPly TPO*	Induction welded to InvisiWeld plates	**-75 (Lim. 7)**
R-W-9	*Steel Deck (G33, P, L6, S24)* or *Concrete Deck*	Min. 0.5-inch *Insulation*	*InvisiWeld* fastened at a rate of *12 per 4 ft. x 8 ft. board (Alt. Pattern)*	*UltraPly TPO*	Induction welded to InvisiWeld plates	**-75 (Lim. 7)**
R-W-10	*Wood Deck (T7/16, L24, N6)* (OSB or plywood for existing construction and new construction in Non-HVHZ)	*DensDeck*	*Preliminarily Secured*	*UltraPly TPO*	*Invisiweld secured* max. 96-inch o.c. through deck into wood rafters/trusses a min. of 2-inch prior to membrane installation; Membrane Induction welded to InvisiWeld plates	**-75 (Lim. 7)**
R-W-11	Existing metal roof attached to min. 16 ga, purlins spaced 5-ft o.c.	*Insulation*	SFS Purlin Fastener and UltraPly TPO Invisiweld-S Plates fastened 6-inch o.c. in rows 5-ft o.c.	*UltraPly TPO*	Induction welded to Invisiweld-S plates	**-90 (Lim. 7)**
R-W-12	*Steel Deck (G33, F2, L6, S30)* or *Concrete Deck*	Max. 1-inch *Insulation* (length shall be perpendicular to deck ribs)	*InvisiWeld* fastened at a rate of *16 per 4 ft. x 8 ft. board;* Plate pattern offset 12-inches from each adjacent row of insulation boards	*UltraPly TPO*	Induction welded to InvisiWeld plates	**-105 (Lim. 7)**

Assemblies with All Layers Adhered over *Steel Deck* (New or Existing)									
System No.	*Deck Detail*	Vapor Barrier	Base Insulation	Base Insulation	Top Insulation	Top Attachment	Membrane	Membrane Attachment	*MDP* (psf)
S-A-1	*G33, L6*	V-Force Vapor Barrier Membrane	Min. 1.5-inch *ISO*	*Insulation Adhesive X*; Ribbons spaced 12-inch o.c.	-	-	*UltraPly TPO*	*Membrane Adhesive V*	**-37.5 (Lim. 9; Non-HVHZ)**
							UltraPly TPO FA	*Membrane Adhesive IV*	
							UltraPly TPO FSA	Self-adhered	

This evaluation report is provided for State of Florida product approval under Rule 61G20-3. The manufacturer shall notify CREEK Technical Services, LLC of any product changes or quality assurance changes throughout the duration for which this report is valid. This evaluation report does not express nor imply warranty, installation, recommended use, or other product attributes that are not specifically addressed herein.

Assemblies with All Layers Adhered over *Steel Deck* (New or Existing)									
System No.	*Deck Detail*	Vapor Barrier	Base Insulation	Base Insulation	Top Insulation	Top Attachment	Membrane	Membrane Attachment	*MDP* (psf)
S-A-2	*G33, L5*	V-Force Vapor Barrier Membrane	Min. 1.5-inch *ISO*	*Insulation Adhesive X*; Ribbons spaced 12-inch o.c. .	-	-	*UltraPly TPO* or *UltraPly TPO FA*	*Membrane Adhesive IV*	**-45 (Lim. 9; Non-HIVHZ)**
							UltraPly TPO FSA	Self-adhered	
S-A-3	*G33, L5*	*BASEGARD* over Min. 0.5-inch DensDeck Prime attached with I.S.O. Stick Ribbons spaced 12-inch o.c.	Min. 0.5-inch *ISO*	ASTM D 312 Type IV Asphalt	-	-	*UltraPly TPO* or *UltraPly TPO FA*	*Membrane Adhesive IV*	**-45 (Lim. 9; Non-HVHZ)**
							UltraPly TPO FSA	Self-adhered	
S-A-4	*G33, L5*	-	Min. 1.5-inch *ISO*	*Insulation Adhesive X*; Ribbons spaced 12-inch o.c.	-	-	*UltraPly TPO* or *UltraPly TPO FA*	*Membrane Adhesive IV*	**-45 (Lim. 9; Non-HVHZ)**
							UltraPly TPO FSA	Self-adhered	
S-A-5	*G33, L5*	V-Force Vapor Barrier Membrane over 0.5-inch DensDeck Prime secured with *AP Fasteners & Plates* at *8 per 4 ft. x 8 ft. board*	Min. 0.5-inch *ISO*	I.S.O. Spray R or Twin Jet spaced 12-inch o.c.	*DensDeck Prime*	I.S.O. Spray R or Twin Jet spaced 12-inch o.c.	*UltraPly TPO*	*Membrane Adhesive V*	**-45 (Lim. 9; Non-HVHZ)**
							UltraPly TPO FSA	Self-adhered	
							UltraPly TPO XR	*XR-S, TJ-R,* or I.S.O. Spray R ribbon adhered 12-inch o.c.; *HA; PermaMop; XR-BA; JBSA* or *TJ-S*	
S-A-6	*G33, L6, P, S24*	V-Force Vapor Barrier Membrane	Min. 2-inch *ISO*	I.S.O. Twin Pack Insulation Adhesive or Twin Jet; Ribbons spaced 6-inch o.c	-	-	*UltraPly TPO* or *UltraPly TPO FA*	*Membrane Adhesive IV*	**-60 (Lim. 9)**
							UltraPly TPO FSA	Self-adhered	
							UltraPly TPO SA (HVHZ ONLY)	Self-adhered	
S-A-7	*G33, L6, P, S24*	-	Min. 2-inch *ISO*	*Insulation Adhesive IV*; Ribbons spaced 6-inch o.c.	-	-	*UltraPly TPO* or *UltraPly TPO FA*	*Membrane Adhesive IV*	**-75 (Lim. 9)**
							UltraPly TPO FSA	Self-adhered	
							UltraPly TPO SA (HVHZ ONLY)	Self-adhered	

This evaluation report is provided for State of Florida product approval under Rule 61G20-3. The manufacturer shall notify CREEK Technical Services, LLC of any product changes or quality assurance changes throughout the duration for which this report is valid. This evaluation report does not express nor imply warranty, installation, recommended use, or other product attributes that are not specifically addressed herein.

Assemblies with Adhered Membranes over Insulated *Steel Deck* (New, Existing or *Recover*)								
System No.	*Deck Detail*	Base Insulation	Base Insulation Attachment	Top Insulation or Base Sheet	Top Insulation or Base Sheet Attachment	Membrane	Membrane Attachment	*MDP* (psf)
S-AM-1	*G33*	Min. 0.5-inch *Insulation*	*Preliminarily Secured* or secured with top layer	0.5-inch DensDeck Prime	*AP Fasteners & Plates* secured *10 per 4 ft. x 8 ft. board*	*UltraPly TPO* or *UltraPly TPO FA*	*Membrane Adhesive IV*	**-30 (Lim. 7; Non-HVHZ)**
						UltraPly TPO FSA	Self-adhered	
						UltraPly TPO XR	*XR-S, TJ-R,* or I.S.O. Spray R ribbon adhered 12-inch o.c.; *HA; PermaMop; XR-BA; JBSA* or *TJ-S*	
S-AM-2	*G33*	Min. 0.5-inch *Insulation*	*Preliminarily Secured* or secured with top layer	3/8-inch SECUROCK	*HD Fasteners & Plates* secured *8 per 4 ft x 8 ft board*	*UltraPly TPO*	*Membrane Adhesive V*	**-30 (Lim. 7; Non-HVHZ)**
						UltraPly TPO FA	*Membrane Adhesive IV*	
						UltraPly TPO FSA	Self-adhered	
						UltraPly TPO XR	*HA; PermaMop; XR-BA; JBSA* or *TJ-S*	
S-AM-3	*G33, P, L6, S24*	Min. 0.5-inch *ISO*	*Preliminarily Secured* or secured with top layer	SBS PolyBase	*HD Fasteners & Plates* secured 12-inch o.c. in the 3-3/8" welded lap	*UltraPly TPO* XR	I.S.O. Spray R ribbon adhered 12-inch o.c.	**-37.5 (Lim. 7; Non-HVHZ)**
S-AM-4	*G33*	Min. 0.5-inch DensDeck Prime primed with SA-WB Primer	*AP Fasteners & Plates* secured *12 per 4 ft. x 8 ft. board*	V-Force Vapor Barrier Membrane self-adhered under Min. 1.5-inch *ISO*	I.S.O. Twin Pack Insulation Adhesive or Twin Jet; Ribbons spaced 12-inch o.c.	*UltraPly TPO* or *UltraPly TPO FA*	*Membrane Adhesive IV*	**-37.5 (Lim. 7; Non-HVHZ)**
						UltraPly TPO FSA	Self-adhered	
S-AM-5	*G33, L6, F2, S24*	OPTIONAL *Insulation*	*Preliminarily Secured* or secured with top layer	Min. 2-inch *ISO, ISO HD-C* or *ISO CG*	*AP Fasteners & Plates* secured *12 per 4 ft. x 8 ft. board (Alt. Pattern 2)*	*UltraPly TPO* or *UltraPly TPO FA*	*Membrane Adhesive I*	**-37.5 (Lim. 7; Non-HVHZ)**
						UltraPly TPO FSA	Self-adhered	
S-AM-6	*G33*	Min. 0.5-inch DensDeck Prime primed with SA-WB Primer	*AP Fasteners & Plates* secured *12 per 4 ft. x 8 ft. board*	V-Force Vapor Barrier Membrane self-adhered under Min. 1.5-inch *ISO*	I.S.O. Stick or Twin Jet; Ribbons spaced 12-inch o.c.	*UltraPly TPO* or *UltraPly TPO FA*	*Membrane Adhesive IV*	**-45 (Lim. 7; Non-HVHZ)**
						UltraPly TPO FSA	Self-adhered	
S-AM-7	*G33*	Min 1-inch *Insulation*	*Preliminarily Secured* or secured with top layer	Min. 0.5-inch *SECUROCK*	*AP Fasteners & Plates* secured *8 per 4 ft. x 8 ft. board*	*UltraPly TPO* or *UltraPly TPO FA*	*Membrane Adhesive IV*	**-45 (Lim. 7; Non-HVHZ)**
						UltraPly TPO FSA	Self-adhered	

This evaluation report is provided for State of Florida product approval under Rule 61G20-3. The manufacturer shall notify CREEK Technical Services, LLC of any product changes or quality assurance changes throughout the duration for which this report is valid. This evaluation report does not express nor imply warranty, installation, recommended use, or other product attributes that are not specifically addressed herein.

Assemblies with Adhered Membranes over Insulated *Steel Deck* (New, Existing or *Recover*)								
System No.	*Deck Detail*	Base Insulation	Base Insulation Attachment	Top Insulation or Base Sheet	Top Insulation or Base Sheet Attachment	Membrane	Membrane Attachment	*MDP* (psf)
S-AM-8	*G33, L5*	Min. 0.5-inch *Insulation*	*Preliminarily Secured* or secured with top layer	MB Base, SBS Base, or Channel Venting Base	*AP Fasteners & Plates* secured 12-inch o.c. at the lap and 12-inch o.c. in two staggered, intermediate rows	*UltraPly TPO XR*	*HA or PermaMop*	**-45 (Lim. 7; Non-HVHZ)**
S-AM-9	*G33, L5*	Min. 0.5-inch *Insulation*	*Preliminarily Secured* or secured with top layer	SBS Base 3.4-inch side laps	*AP Fasteners & Plates* secured 12-inch o.c. at the lap and 12-inch o.c. in two staggered, intermediate rows	*UltraPly TPO XR*	*XR-S* or I.S.O. Spray R Ribbons spaced 12" o.c. and located directly over the base sheet fastener rows	**-45 (Lim. 7; Non-HVHZ)**
S-AM-10	*G33, P, L6, S24*	OPTIONAL *Insulation*	*Preliminarily Secured* or secured with top layer	*SECUROCK*	*AP Fasteners & Plates* secured *18 per 4 ft. x 8 ft. board*	*UltraPly TPO*	*Membrane Adhesive V*	**-45 (Lim. 7)**
						UltraPly TPO FA	*Membrane Adhesive IV*	
						UltraPly TPO FSA	Self-adhered	
S-AM-11	*G33*	Min. 0.5-inch *Insulation*	*Preliminarily Secured* or secured with top layer	Min. 0.5-inch DensDeck Prime	*AP Fasteners & Plates* secured *12 per 4 ft. x 8 ft. board*	*UltraPly TPO*	*Membrane Adhesive V*	**-45 (Lim. 7; Non-HVHZ)**
						UltraPly TPO FA	*Membrane Adhesive IV*	
						UltraPly TPO FSA	Self-adhered	
						UltraPly TPO XR	*XR-S* or *TJ-R* ribbon adhered 6-inch o.c.; *JBSA* or *TJ-S*	
S-AM-12	*G33*	Min. 0.5-inch *Insulation*	*Preliminarily Secured* or secured with top layer	Min. 0.375-inch *SECUROCK*	*AP Fasteners & Plates* secured *8 per 4 ft. x 8 ft. board*	*UltraPly TPO*	*Membrane Adhesive V*	**-45 (Lim. 7; Non-HVHZ)**
						UltraPly TPO FA	*Membrane Adhesive IV*	
						UltraPly TPO FSA	Self-adhered	
						UltraPly TPO XR	*XR-S, TJ-R,* or I.S.O. Spray R ribbon adhered 12-inch o.c.; *HA; PermaMop; XR-BA; JBSA* or *TJ-S*	
S-AM-13	*G33*	Min. 0.5-inch *Insulation*	*Preliminarily Secured* or secured with top layer	Min. 0.5-inch *SECUROCK*	*AP Fasteners & Plates* secured *8 per 4 ft. x 8 ft. board*	*UltraPly TPO* XR	*XR-S, TJ-R,* or I.S.O. Spray R ribbon adhered 12-inch o.c.; *HA; PermaMop; XR-BA; JBSA* or *TJ-S*	**-45 (Lim. 7; Non-HVHZ)**
S-AM-14	*G33*	Min. 0.5-inch *Insulation*	*Preliminarily Secured* or secured with top layer	*SECUROCK*	*HD Fasteners & Plates* secured *10 per 4 ft. x 8 ft. board (Alt. Pattern)*	*Ultraply TPO*	*Membrane Adhesive V*	**-45 (Lim. 7; Non-HVHZ)**
						UltraPly TPO FA	*Membrane Adhesive IV*	
						UltraPly TPO FSA	Self-adhered	
						Ultraply TPO XR	*XR-BA, PermaMop; HA;* or *TJ-S*	

This evaluation report is provided for State of Florida product approval under Rule 61G20-3. The manufacturer shall notify CREEK Technical Services, LLC of any product changes or quality assurance changes throughout the duration for which this report is valid. This evaluation report does not express nor imply warranty, installation, recommended use, or other product attributes that are not specifically addressed herein.

Assemblies with Adhered Membranes over Insulated *Steel Deck* (New, Existing or *Recover*)								
System No.	*Deck Detail*	Base Insulation	Base Insulation Attachment	Top Insulation or Base Sheet	Top Insulation or Base Sheet Attachment	Membrane	Membrane Attachment	*MDP* (psf)
S-AM-15	*G33*	Min. 1.5-inch *Insulation*	*Preliminarily Secured* or secured with top layer	Min. 0.5-inch *DensDeck Prime*	*AP Fasteners & Plates* secured *8 per 4 ft. x 8 ft. board*	*UltraPly TPO*	*Membrane Adhesive III*	**-45 (Lim. 7; Non-HVHZ)**
						UltraPly TPO FA	Single-Ply LVOC Bonding Adhesive or Single-Ply LVOC Bonding Adhesive 1168	
						UltraPly TPO FSA	Self-adhered	
						UltraPly TPO XR	*XR-S* or *TJ-R* ribbon adhered 4-inch o.c.; *JBSA* or *TJ-S*	
S-AM-16	*G33*	Min. 2-inch *ISO*	Elevate #12 Fasteners and Trufast 3" Metal Seam Plates secured *8 per 4 ft. x 8 ft. board*	*DensDeck Prime*	I.S.O Twin Pack or Twin Jet ribbon adhered 12-inch o.c.	*UltraPly TPO*	*Membrane Adhesive III*	**-45 (Lim. 7; Non-HVHZ)**
						UltraPly TPO FA	Single-Ply LVOC Bonding Adhesive or Single-Ply LVOC Bonding Adhesive 1168	
						UltraPly TPO FSA	Self-adhered	
						UltraPly TPO XR	*XR-S* or *TJ-R* ribbon adhered 6-inch o.c.; *JBSA* or *TJ-S*	
S-AM-17	*G33*	*DensDeck Prime*	*AP Fasteners & Insulation Plates* secured *8 per 4 ft x 8 ft board* followed by *V-Force*	Min. 1.5-inch *ISO* or Tapered *ISO* with *ISO HD* or *DensDeck Prime*	I.S.O. Stick or Twin Jet applied in ribbons spaced 12-inch o.c.	*UltraPly TPO*	*Membrane Adhesive V*	**-45 (Lim. 7; Non-HVHZ)**
						UltraPly TPO FA	*Membrane Adhesive IV*	
						UltraPly TPO FSA	Self-adhered	
						UltraPly TPO XR	*XR-S, TJ-R, or* I.S.O. Spray R ribbon adhered 12-inch o.c.; *JBSA* or *TJ-S*	
S-AM-18	Min. 24 ga. form deck	OPTIONAL *Insulation*	*Preliminarily Secured* or secured with top layer	Min. 2-inch *ISO* or *ISO CG*	*AP Fasteners & Plates* secured *15 per 4 ft. x 8 ft. board*	*UltraPly TPO*	*Membrane Adhesive V*	**-45 (Lim. 7; Non-HVHZ)**
						UltraPly TPO FA	*Membrane Adhesive IV*	
						UltraPly TPO FSA	Self-adhered	
S-AM-19	*G33, P, L6, S24*	OPTIONAL *Insulation*	*Preliminarily Secured* or secured with top layer	*SECUROCK*	*AP Fasteners & Plates* secured *18 per 4 ft. x 8 ft. board*	*UltraPly TPO FSA*	Self-adhered	**-45 (Lim. 7)**
						UltraPly TPO SA (HVHZ ONLY)	Self-adhered	
						UltraPly TPO XR	*XR-S, TJ-R,* or I.S.O. Spray R ribbon adhered 12-inch o.c.; *HA; PermaMop; XR-BA; JBSA* or *TJ-S*	

This evaluation report is provided for State of Florida product approval under Rule 61G20-3. The manufacturer shall notify CREEK Technical Services, LLC of any product changes or quality assurance changes throughout the duration for which this report is valid. This evaluation report does not express nor imply warranty, installation, recommended use, or other product attributes that are not specifically addressed herein.

Assemblies with Adhered Membranes over Insulated *Steel Deck* (New, Existing or *Recover*)								
System No.	*Deck Detail*	Base Insulation	Base Insulation Attachment	Top Insulation or Base Sheet	Top Insulation or Base Sheet Attachment	Membrane	Membrane Attachment	*MDP* (psf)
S-AM-20	*G33, P, L6, S24*	OPTIONAL *Insulation*	*Preliminarily Secured* or secured with top layer	Min. 2-inch *ISO*	*AP Fasteners & Plates* secured *12 per 4 ft. x 8 ft. board*	*UltraPly TPO*	*Membrane Adhesive V*	**-45 (Lim.7)**
						UltraPly TPO FA	*Membrane Adhesive IV*	
						UltraPly TPO FSA	Self-adhered	
						UltraPly TPO SA (HVHZ ONLY)	Self-adhered	
S-AM-21	*G33, F1, L6, S24*	OPTIONAL *Insulation*	*Preliminarily Secured* or secured with top layer	Min. 1-inch *ISO CG*	*AP Fasteners & Plates* secured *20 per 4 ft. x 8 ft. board (Alt. Pattern)*	*UltraPly TPO*	UltraPly Bonding Adhesive or *JBSA*	**-52.5 (Lim. 7)**
						UltraPly TPO FA	*Membrane Adhesive IV*	
						UltraPly TPO FSA	Self-adhered	
						UltraPly TPO SA (HVHZ ONLY)	Self-adhered	
S-AM-22	*G33, P* or *F1, L6, S12*	OPTIONAL *Insulation*	*Preliminarily Secured* or secured with top layer	*DensDeck Prime*	*AP Fasteners & Plates* secured *18 per 4 ft. x 8 ft. board*	*UltraPly TPO*	*Membrane Adhesive V*	**-52.5 (Lim. 7)**
						UltraPly TPO FA	*Membrane Adhesive IV*	
						UltraPly TPO FSA	Self-adhered	
						UltraPly TPO SA (HVHZ ONLY)	Self-adhered	
						UltraPly TPO XR	*XR-BA, PermaMop; HA; JBSA* or *TJ-S*	
S-AM-23	*G33, P, L6, S12W*	OPTIONAL *Insulation*	*Preliminarily Secured* or secured with top layer	Min. 1.5-inch *ISO*	*AP Fasteners & Plates* secured *18 per 4 ft. x 8 ft. board*	*UltraPly TPO* or *UltraPly TPO FA*	*Membrane Adhesive IV*	**-60 (Lim. 7)**
						UltraPly TPO FSA	Self-adhered	
						UltraPly TPO SA (HVHZ ONLY)	Self-adhered	
S-AM-24	*G33, P, L6, S24*	OPTIONAL *Insulation*	*Preliminarily Secured* or secured with top layer	Min. 0.5-inch *SECUROCK*	*AP Fasteners & Plates* secured *15 per 4 ft. x 8 ft. board*	*UltraPly TPO* or *UltraPly TPO FA*	*Membrane Adhesive IV*	**-60 (Lim. 7)**
						UltraPly TPO FSA	Self-adhered	
						UltraPly TPO SA (HVHZ ONLY)	Self-adhered	
						UltraPly TPO XR	*XR-BA, PermaMop; HA;* or *TJ-S*	

This evaluation report is provided for State of Florida product approval under Rule 61G20-3. The manufacturer shall notify CREEK Technical Services, LLC of any product changes or quality assurance changes throughout the duration for which this report is valid. This evaluation report does not express nor imply warranty, installation, recommended use, or other product attributes that are not specifically addressed herein.

Assemblies with Adhered Membranes over Insulated *Steel Deck* (New, Existing or *Recover*)								
System No.	*Deck Detail*	Base Insulation	Base Insulation Attachment	Top Insulation or Base Sheet	Top Insulation or Base Sheet Attachment	Membrane	Membrane Attachment	*MDP* (psf)
S-AM-25	*G33, P, L6, S24*	Min. 2-inch *ISO* or *ISO CG*	*AP Fasteners & Plates* secured *18 per 4 ft. x 8 ft. board*	Min. 0.5-inch *ISO* or *ISO CG* followed by *ISO HD*	*Insulation Adhesive VI* Ribbons spaced 6-inch o.c.	*UltraPly TPO*	*Membrane Adhesive V*	**-60 (Lim. 7)**
						UltraPly TPO FA	*Membrane Adhesive IV*	
						UltraPly TPO FSA	Self-adhered	
						UltraPly TPO SA (HVHZ ONLY)	Self-adhered	
						UltraPly TPO XR	*XR-S, TJ-R,* or I.S.O. Spray R ribbon adhered 12-inch o.c.; *JBSA* or *TJ-S*	
S-AM-26	*G33, F1, L6, S24*	OPTIONAL *Insulation*	*Preliminarily Secured* or secured with top layer	Min. 0.5-inch *SECUROCK*	*AP Fasteners & Plates* secured *18 per 4 ft. x 8 ft. board*	*UltraPly TPO* or *UltraPly TPO FA*	*Membrane Adhesive IV*	**-60 (Lim. 7)**
						UltraPly TPO FSA	Self-adhered	
						UltraPly TPO SA (HVHZ ONLY)	Self-adhered	
						UltraPly TPO XR	*XR-BA, PermaMop; HA;* or *TJ-S*	
S-AM-27	*G33, F1, L6, S24*	Min. 1.5-inch *ISO*	*AP Fasteners & Plates* secured *18 per 4 ft. x 8 ft. board*	Min. 1.5-inch *ISO HD-C*	*Insulation Adhesive VII* ribbons spaced 12-inch o.c.	*UltraPly TPO* or *UltraPly TPO FA*	UltraPly Bonding Adhesive or *JBSA*	**-60 (Lim. 7)**
						UltraPly TPO FSA	Self-adhered	
						UltraPly TPO SA (HVHZ ONLY)	Self-adhered	
S-AM-28	*G33, L5*	Min 1-inch *Insulation*	*Preliminarily Secured* or secured with top layer	Min. 0.5-inch SECUROCK	*AP Fasteners & Plates* secured *8 per 4 ft. x 8 ft. board*	*UltraPly TPO* or *UltraPly TPO FA*	*Membrane Adhesive IV*	**-62.5 (Lim. 9)**
						UltraPly TPO FSA	Self-adhered	
S-AM-29	*G33, P, L6, S24*	Min. 2-inch *ISO* or *ISO CG*	*AP Fasteners & Plates* secured *18 per 4 ft. x 8 ft. board*	*ISO HD*	*Insulation Adhesive VI* Ribbons spaced 6-inch o.c.	*UltraPly TPO*	*Membrane Adhesive V*	**-67.5 (Lim. 7)**
						UltraPly TPO FA	*Membrane Adhesive IV*	
						UltraPly TPO FSA	Self-adhered	
						UltraPly TPO SA (HVHZ ONLY)	Self-adhered	
						UltraPly TPO XR	*XR-S, TJ-R,* or I.S.O. Spray R ribbon adhered 12-inch o.c.; *JBSA* or *TJ-S*	

This evaluation report is provided for State of Florida product approval under Rule 61G20-3. The manufacturer shall notify CREEK Technical Services, LLC of any product changes or quality assurance changes throughout the duration for which this report is valid. This evaluation report does not express nor imply warranty, installation, recommended use, or other product attributes that are not specifically addressed herein.

Assemblies with Adhered Membranes over Insulated *Steel Deck* (New, Existing or *Recover*)								
System No.	*Deck Detail*	Base Insulation	Base Insulation Attachment	Top Insulation or Base Sheet	Top Insulation or Base Sheet Attachment	Membrane	Membrane Attachment	*MDP* (psf)
S-AM-30	*G33, P, L6, S24*	Min. 2-inch *ISO*	*AP Fasteners & Plates* secured *18 per 4 ft. x 8 ft. board*	*SECUROCK*	*Insulation Adhesive VII* ribbons spaced 6-inch o.c.	*UltraPly TPO* or *UltraPly TPO FA*	*Membrane Adhesive IV*	**-67.5 (Lim. 7)**
						UltraPly TPO FSA	Self-adhered	
						UltraPly TPO XR	*XR-BA, PermaMop; HA;* or *TJ-S*	
S-AM-31	*G33, P, L6, S24*	Min. 2-inch *ISO*	*AP Fasteners & Plates* secured *18 per 4 ft. x 8 ft. board*	*SECUROCK*	I.S.O. Stick Ribbons spaced 6-inch o.c.	*UltraPly TPO FSA*	Self-adhered	**-67.5 (Lim. 7)**
						UltraPly TPO SA (HVHZ ONLY)	Self-adhered	
S-AM-32	*G33, F1, L6, S24*	OPTIONAL *Insulation*	*Preliminarily Secured* or secured with top layer	Min. 1.5-inch *ISO HD-C*	*AP Fasteners & Plates* secured *15 per 4 ft. x 8 ft. board*	*UltraPly TPO* or *UltraPly TPO FA*	UltraPly Bonding Adhesive or *JBSA*	**-67.5 (Lim. 7)**
						UltraPly TPO FSA	Self-adhered	
						UltraPly TPO SA (HVHZ ONLY)	Self-adhered	
S-AM-33	*G33, P, L6, S24*	OPTIONAL *Insulation*	*Preliminarily Secured* or secured with top layer	Min. 0.5-inch *SECUROCK*	*AP Fasteners & Plates* secured *20 per 4 ft. x 8 ft. board*	*UltraPly TPO* or *UltraPly TPO FA*	*Membrane Adhesive IV*	**-67.5 (Lim. 7)**
						UltraPly TPO FSA	Self-adhered	
						UltraPly TPO SA (HVHZ ONLY)	Self-adhered	
						UltraPly TPO XR	*XR-BA, PermaMop; HA;* or *TJ-S*	
S-AM-34	*G33, F1, L6, S12*	OPTIONAL *Insulation*	*Preliminarily Secured* or secured with top layer	Min. 0.5-inch *DensDeck Prime*	*AP Fasteners & Plates* secured *18 per 4 ft. x 8 ft. board*	*UltraPly TPO*	*Membrane Adhesive III*	**-67.5 (Lim. 7)**
						UltraPly TPO FA	Single-Ply LVOC Bonding Adhesive or Single-Ply LVOC Bonding Adhesive 1168	
						UltraPly TPO FSA	Self-adhered	
						UltraPly TPO SA (HVHZ ONLY)	Self-adhered	
						UltraPly TPO XR	*XR-S, TJ-R,* ribbon adhered 4-inch o.c.; *JBSA* or *TJ-S*	
S-AM-35	*G33, F1, L6, S24*	OPTIONAL *Insulation*	*Preliminarily Secured* or secured with top layer	Min. 1.5-inch *ISO HD-C*	*AP Fasteners & Plates* secured *18 per 4 ft. x 8 ft. board*	*UltraPly TPO* or *UltraPly TPO FA*	UltraPly Bonding Adhesive or *JBSA*	**-75 (Lim. 7)**
						UltraPly TPO FSA	Self-adhered	
						UltraPly TPO SA (HVHZ ONLY)	Self-adhered	

This evaluation report is provided for State of Florida product approval under Rule 61G20-3. The manufacturer shall notify CREEK Technical Services, LLC of any product changes or quality assurance changes throughout the duration for which this report is valid. This evaluation report does not express nor imply warranty, installation, recommended use, or other product attributes that are not specifically addressed herein.

Assemblies with Adhered Membranes over Insulated *Steel Deck* (New, Existing or *Recover*)								
System No.	*Deck Detail*	Base Insulation	Base Insulation Attachment	Top Insulation or Base Sheet	Top Insulation or Base Sheet Attachment	Membrane	Membrane Attachment	*MDP* (psf)
S-AM-36	*G33, F1, L6, S24*	OPTIONAL *Insulation*	*Preliminarily Secured* or secured with top layer	Min. 2-inch *ISO*	*AP Fasteners & Plates* secured *20 per 4 ft. x 8 ft. board*	*UltraPly TPO* or *UltraPly TPO FA*	UltraPly Bonding Adhesive or *JBSA*	**-75 (Lim. 7)**
						UltraPly TPO FSA	Self-adhered	
						UltraPly TPO SA (HVHZ ONLY)	Self-adhered	
S-AM-37	*G33, F1, L6, S12*	OPTIONAL *Insulation*	*Preliminarily Secured* or secured with top layer	Min. 0.5-inch *DensDeck Prime*	*AP Fasteners & Plates* secured *20 per 4 ft. x 8 ft. board*	*UltraPly TPO*	*Membrane Adhesive III*	**-75 (Lim. 7)**
						UltraPly TPO FA	Single-Ply LVOC Bonding Adhesive or Single-Ply LVOC Bonding Adhesive 1168	
						UltraPly TPO FSA	Self-adhered	
						UltraPly TPO SA (HVHZ ONLY)	Self-adhered	
						UltraPly TPO XR	*XR-S, TJ-R,* ribbon adhered 4-inch o.c.; or *TJ-S*	
S-AM-38	*G33, F1, L6, S24*	Min. 2-inch *ISO*	*HD Fasteners & Plates* secured *20 per 4 ft. x 8 ft. board*	*ISO HD*	I.S.O. Stick, I.S.O. Spray R or I.S.O. Twin Pack ribbon adhered 6-inch o.c.	*UltraPly TPO XR*	*XR-S, TJ-R,* ribbon adhered 6-inch o.c.; or *TJ-S*	**-82.5 (Lim. 7)**
S-AM-39	*G33, P, L6, S24*	OPTIONAL *Insulation*	*Preliminarily Secured* or secured with top layer	Min. 0.5-inch *SECUROCK*	*AP Fasteners & Plates* secured *18 per 4 ft. x 8 ft. board*	*UltraPly TPO* or *UltraPly TPO FA*	UltraPly Bonding Adhesive or *JBSA*	**-82.5 (Lim. 7)**
						UltraPly TPO FSA	Self-adhered	
						UltraPly TPO SA (HVHZ ONLY)	Self-adhered	
S-AM-40	*G33, F1, L6, S24*	Min. 2-inch *ISO* or *ISO CG*	*AP Fasteners & Plates* secured 32 per *4 ft x 8 ft board*	Min. 0.5-inch *DensDeck Prime*	I.S.O. Spray R or Twin Jet ribbon adhered 12-inch o.c.	*UltraPly TPO XR*	I.S.O. Spray R or *TJ-R* ribbon adhered 12-inch o.c.; or *TJ-S*	**-82.5 (Lim. 7)**
S-AM-41	*G33, F2, L6, S12*	Min. 1.5-inch *Insulation*	*Preliminarily Secured* or secured with top layer	Min. 0.5-inch *DensDeck Prime*	*AP Fasteners & Plates* secured *32 per 4 ft. x 8 ft. board*	*UltraPly TPO*	*Membrane Adhesive III*	**-82.5 (Lim. 7)**
						UltraPly TPO FA	Single-Ply LVOC Bonding Adhesive or Single-Ply LVOC Bonding Adhesive 1168	
						UltraPly TPO FSA	Self-adhered	
						UltraPly TPO SA (HVHZ ONLY)	Self-adhered	
						UltraPly TPO XR	*XR-S, TJ-R,* ribbon adhered 4-inch o.c.; or *TJ-S*	

This evaluation report is provided for State of Florida product approval under Rule 61G20-3. The manufacturer shall notify CREEK Technical Services, LLC of any product changes or quality assurance changes throughout the duration for which this report is valid. This evaluation report does not express nor imply warranty, installation, recommended use, or other product attributes that are not specifically addressed herein.

Assemblies with Adhered Membranes over Insulated *Steel Deck* (New, Existing or *Recover*)								
System No.	*Deck Detail*	Base Insulation	Base Insulation Attachment	Top Insulation or Base Sheet	Top Insulation or Base Sheet Attachment	Membrane	Membrane Attachment	*MDP* (psf)
S-AM-42	*G33, F1, L6, S24*	OPTIONAL *Insulation*	*Preliminarily Secured* or secured with top layer	Min. 1.5-inch *ISO*	*AP Fasteners & Plates* secured *24 per 4 ft. x 8 ft. board*	*UltraPly TPO* or *UltraPly TPO FA*	UltraPly Bonding Adhesive at a rate 60 ft^2/gal	**-90 (Lim. 7)**
						UltraPly TPO FSA	Self-adhered	
						UltraPly TPO SA (HVHZ ONLY)	Self-adhered	
S-AM-43	*G80, F1, L6, S24*	Min. 2-inch *ISO* or *ISO CG*	*AP Fasteners & Plates* secured 32 per *4 ft x 8 ft board*	Min. 0.5-inch *DensDeck Prime*	I.S.O. Spray R ribbon adhered 12-inch o.c.	*UltraPly TPO XR*	I.S.O. Spray R ribbon adhered 12-inch o.c.; or *TJ-S*	**-97.5 (Lim. 7)**
S-AM-44	*G80, F2, L6, S12*	Min. 1.5-inch *Insulation*	*Preliminarily Secured* or secured with top layer	Min. 0.5-inch *DensDeck Prime*	*AP Fasteners & Plates* secured *32 per 4 ft. x 8 ft. board*	*UltraPly TPO*	*Membrane Adhesive III*	**-127.5 (Lim. 7)**
						UltraPly TPO FA	Single-Ply LVOC Bonding Adhesive or Single-Ply LVOC Bonding Adhesive 1168	
						UltraPly TPO SA (HVHZ ONLY)	Self-adhered	
						UltraPly TPO XR	*XR-S, TJ-R,* ribbon adhered 4-inch o.c.; or *TJ-S*	
S-AM-45	*G80, F2, L6, S12*	OPTIONAL *Insulation*	*Preliminarily Secured* or secured with top layer	Min. 2-inch ISO 95+ GL	*AP Fasteners & Plates* secured 32 per *4 ft x 8 ft board*	*UltraPly TPO* or *UltraPly TPO FA*	UltraPly Bonding Adhesive	**-142.5 (Lim. 7)**

Mechanically Fastened Assemblies over *Steel Deck* (New or Existing)									
System No.	*Deck Detail*	Air/Vapor Barrier	Base Insulation	Base Insulation Attachment	Top Insulation	Top Insulation Attachment	Membrane	Membrane Attachment	*MDP* (psf)
S-M-1	*G33, L6*	-	OPTIONAL *Insulation*	*Preliminarily Secured* or Secured with Top Layer	OPTIONAL *Cover Board*	*Preliminarily Secured*	*UltraPly TPO* (120-inch wide)	Attached in-lap 12-inch o.c. with *HD Fasteners & Plates;* Side laps spaced 114-inch o.c.	**-30 (Lim. 7; Non-HVHZ)**
S-M-2	*G33, L6*	V-Force Vapor Barrier Membrane installed as *Air Barrier* over loose-laid *DensDeck Prime*	OPTIONAL *Insulation*	*Preliminarily Secured* or Secured with Top Layer	Min. 2-inch *ISO* or *ISO CG*	*AP Fasteners and Plates* secured min. *8 per 4-ft x 8-ft board*	*UltraPly TPO* (120-inch wide)	Attached in-lap 12-inch o.c. with *HD Fasteners & Plates*; Fastener rows 114-inch o.c.	**-30 (Lim. 7; Non-HVHZ)**

This evaluation report is provided for State of Florida product approval under Rule 61G20-3. The manufacturer shall notify CREEK Technical Services, LLC of any product changes or quality assurance changes throughout the duration for which this report is valid. This evaluation report does not express nor imply warranty, installation, recommended use, or other product attributes that are not specifically addressed herein.

Mechanically Fastened Assemblies over *Steel Deck* (New or Existing)									
System No.	*Deck Detail*	Air/Vapor Barrier	Base Insulation	Base Insulation Attachment	Top Insulation	Top Insulation Attachment	Membrane	Membrane Attachment	*MDP* (psf)
S-M-3	*G33, L6*	V-Force Vapor Barrier Membrane installed as *Air Barrier* over loose-laid *DensDeck Prime*	OPTIONAL *Insulation*	*Preliminarily Secured* or Secured with Top Layer	Min. 1.5-inch *ISO* or *ISO CG*	*AP Fasteners and Plates* secured min. *6 per 4-ft x 8-ft board*	*UltraPly TPO* (120-inch wide)	Attached in-lap 6-inch o.c. with *HD Fasteners & Plates*; Fastener rows 114-inch o.c.	**-37.5 (Lim. 7; Non-HVHZ)**
S-M-4	*G33, F1, L6, S24*	-	Min. 1.5-inch *Insulation*	*Preliminarily Secured* or secured with top layer	OPTIONAL *Cover Board*	*Preliminarily Secured*	*UltraPly TPO*	UltraPly QuickSeam R.M.A Strip attached 72-inch o.c. and secured with Polymer Batten Strip and Heavy-Duty fasteners spaced 12-inch o.c. along the batten	**-37.5 (Lim. 7; Non-HVHZ)**
S-M-5	*G80, F1, L6, S24*	-	Min. 1.5-inch *Insulation*	*Preliminarily Secured* or secured with top layer	OPTIONAL *Cover Board*	*Preliminarily Secured*	Min. 60 mil *UltraPly TPO* (120-inch wide)	Attached in-lap 12-inch o.c. with *HD Fasteners & Plates;* Side laps spaced 114-inch o.c.	**-37.5 (Lim. 7; Non-HVHZ)**
S-M-6	*G80, F1, L6, S24*	-	Min. 1.5-inch *Insulation*	*Preliminarily Secured* or secured with top layer	OPTIONAL *Cover Board*	*Preliminarily Secured*	*UltraPly TPO*	UltraPly QuickSeam R.M.A Strip attached 114-inch o.c. and secured with *HD Fasteners & Plates* spaced 12-inch o.c.	**-37.5 (Lim. 7; Non-HVHZ)**
S-M-7	*G33*	-	Min. 1.5-inch *Insulation*	*Preliminarily Secured* or secured with top layer	OPTIONAL *Cover Board*	*Preliminarily Secured*	*UltraPly TPO* (48-inch wide)	Attached in-lap 24-inch o.c. with *HD Fasteners & Plates*; Fastener rows 42-inch o.c.	**-45 (Lim. 7; Non-HVHZ)**
S-M-8	*G33*	-	Min. 1.5-inch *Insulation*	*Preliminarily Secured* or secured with top layer	OPTIONAL *Cover Board*	*Preliminarily Secured*	*UltraPly TPO*	UltraPly QuickSeam R.M.A Strip attached 48-inch o.c. and secured with *HD Fasteners & Plates* spaced 24-inch o.c.	**-45 (Lim. 7; Non-HVHZ)**

This evaluation report is provided for State of Florida product approval under Rule 61G20-3. The manufacturer shall notify CREEK Technical Services, LLC of any product changes or quality assurance changes throughout the duration for which this report is valid. This evaluation report does not express nor imply warranty, installation, recommended use, or other product attributes that are not specifically addressed herein.

Mechanically Fastened Assemblies over *Steel Deck* (New or Existing)									
System No.	*Deck Detail*	Air/Vapor Barrier	Base Insulation	Base Insulation Attachment	Top Insulation	Top Insulation Attachment	Membrane	Membrane Attachment	*MDP* (psf)
S-M-9	*G33*	-	Min. 1.5-inch *Insulation*	*Preliminarily Secured* or secured with top layer	OPTIONAL *Cover Board*	*Preliminarily Secured*	*UltraPly TPO*	UltraPly QuickSeam R.M.A Strip attached 48-inch o.c. and secured with Polymer Batten Strip and Heavy-Duty fasteners spaced 24-inch o.c. along the batten	**-45 (Lim. 7; Non-HVHZ)**
S-M-10	*G33, F1, L6, S24*	-	Min. 1.5-inch *Insulation*	*Preliminarily Secured* or secured with top layer	OPTIONAL *Cover Board*	*Preliminarily Secured*	*UltraPly TPO* (120-inch wide)	Attached in-lap 12-inch o.c. with *HD Fasteners & Plates*; Fastener rows spaced 114-inch o.c.; UltraPly QuickSeam R.M.A Strip attached evenly spaced between side laps and secured with Polymer Batten Strip and Heavy-Duty fasteners spaced 12-inch o.c. along the batten	**-45 (Lim. 7)**
S-M-11	*G33, P, L6, S24*	*DensDeck Prime* loose-laid with V-Force Vapor Barrier Membrane installed as *Air Barrier*	OPTIONAL *Insulation*	*Preliminarily Secured* or Secured with Top Layer	Min. 2-inch *ISO*, *ISO CG* or ISOGARD HD Composite	*AP Fasteners and Plates* secured min. *8 per 4-ft x 8-ft board*	*UltraPly TPO* (120-inch wide)	Attached in-lap 12-inch o.c. with *HD Fasteners & Plates*; Fastener rows 114-inch o.c.	**-45 (Lim. 7)**
S-M-12	*G33, P, L6*	-	Min. 0.5-inch *Insulation*	*Preliminarily Secured* or secured with top layer	OPTIONAL *Cover Board*	*Preliminarily Secured*	*UltraPly TPO* (96-inch wide)	Attached in-lap 12-inch o.c. with *HD Plus Fasteners & Plates*; Fastener rows 90-inch o.c.	**-45 (Lim. 7)**
S-M-13	*G33, F1, L6, S24*	V-Force Vapor Barrier Membrane installed as *Air Barrier*	OPTIONAL *Insulation*	*Preliminarily Secured* or secured with top layer	Min. 0.5-inch *ISO*, *ISO CG* or ISOGARD HD Composite	Insulation Fastening Plates and Elevate Heavy Duty fasteners secured min. *4 per 4-ft x 8-ft board*	*UltraPly TPO* (120-inch wide)	Attached in-lap 12-inch o.c. with *HD Fasteners & Plates;* Side laps spaced 114-inch o.c.	**-45 (Lim. 7)**

This evaluation report is provided for State of Florida product approval under Rule 61G20-3. The manufacturer shall notify CREEK Technical Services, LLC of any product changes or quality assurance changes throughout the duration for which this report is valid. This evaluation report does not express nor imply warranty, installation, recommended use, or other product attributes that are not specifically addressed herein.

Mechanically Fastened Assemblies over *Steel Deck* (New or Existing)									
System No.	*Deck Detail*	Air/Vapor Barrier	Base Insulation	Base Insulation Attachment	Top Insulation	Top Insulation Attachment	Membrane	Membrane Attachment	*MDP* (psf)
S-M-14	*G33, F1, L6, S24*	V-Force Vapor Barrier Membrane installed as *Air Barrier*	OPTIONAL *Insulation*	*Preliminarily Secured* or secured with top layer	Min. 0.5-inch *ISO*, *ISO CG* or ISOGARD HD Composite	Insulation Fastening Plates and Elevate Heavy Duty fasteners secured min. *6 per 4-ft x 8-ft board*	*UltraPly TPO* (148-inch wide)	Attached in-lap 12-inch o.c. with *HD Fasteners & Plates;* Side laps spaced 142-inch o.c.	**-45 (Lim. 7)**
S-M-15	*G80, F1, L6, S24*	-	Min. 1.5-inch *Insulation*	*Preliminarily Secured* or secured with top layer	OPTIONAL *Cover Board*	*Preliminarily Secured*	*UltraPly TPO* (120-inch wide)	Attached in-lap 12-inch o.c. with *HD Plus Fasteners & Plates*; Fastener rows 114-inch o.c.	**-45 (Lim. 7)**
S-M-16	*G80, F1, L6, S24*	-	Min. 1.5-inch *Insulation*	*Preliminarily Secured* or secured with top layer	OPTIONAL *Cover Board*	*Preliminarily Secured*	*UltraPly TPO* (96-inch wide)	Attached in-lap 12-inch o.c. with *HD Fasteners & Plates*; Fastener rows 90-inch o.c.	**-45 (Lim. 7)**
S-M-17	*G33, F1, L6, S24*	-	Min. 0.5-inch *Insulation*	*Preliminarily Secured* or secured with top layer	OPTIONAL *Cover Board*	*Preliminarily Secured*	*UltraPly TPO* (96-inch wide)	Attached in-lap 6-inch o.c. with *HD Fasteners & Plates*; Fastener rows 90-inch o.c.	**-45 (Lim. 7)**
S-M-18	*G33, F1 or P, L6, S24*	-	Min. 1-inch *Insulation*	*Preliminarily Secured* or secured with top layer	OPTIONAL *Cover Board*	*Preliminarily Secured*	UltraPly TPO (148-inch wide)	Attached in-lap 6-inch o.c. with *HD Fasteners & Plates*; Fastener rows 142-inch o.c.	**-45 (Lim. 7)**
S-M-19	*G33, F1, L6, S24*	-	Min. 1.5-inch *Insulation*	*Preliminarily Secured* or secured with top layer	OPTIONAL *Cover Board*	*Preliminarily Secured*	*UltraPly TPO*	UltraPly QuickSeam R.M.A Strip attached 72-inch o.c. and secured with *HD Fasteners & Plates* spaced 12-inch o.c.	**-45 (Lim. 7)**
S-M-20	*G80, F1, L6, S24*	-	Min. 1.5-inch *Insulation*	*Preliminarily Secured* or secured with top layer	OPTIONAL *Cover Board*	*Preliminarily Secured*	*UltraPly TPO*	UltraPly QuickSeam R.M.A Strip attached 114-inch o.c. and secured with *HD Plus Fasteners & Plates* spaced 12-inch o.c.	**-45 (Lim. 7)**

This evaluation report is provided for State of Florida product approval under Rule 61G20-3. The manufacturer shall notify CREEK Technical Services, LLC of any product changes or quality assurance changes throughout the duration for which this report is valid. This evaluation report does not express nor imply warranty, installation, recommended use, or other product attributes that are not specifically addressed herein.

Mechanically Fastened Assemblies over *Steel Deck* (New or Existing)									
System No.	*Deck Detail*	Air/Vapor Barrier	Base Insulation	Base Insulation Attachment	Top Insulation	Top Insulation Attachment	Membrane	Membrane Attachment	*MDP* (psf)
S-M-21	*G33, F1, L6, S24*	V-Force Vapor Barrier Membrane installed as *Air Barrier* over loose-laid *SECUROCK*	OPTIONAL *Insulation*	*Preliminarily Secured* or secured with top layer	Min. 3-inch ISO 95-GL, *ISO CG*, or *ISO HD-C*	Insulation fastening plates and Heavy Duty fasteners secured *8 per 4 ft. x 8 ft. board*	*UltraPly TPO* (120-inch wide)	Attached in-lap 12-inch o.c. with *HD Fasteners & Plates*; Side laps spaced 114-inch o.c.	**-52.5 (Lim. 7)**
S-M-22	*G80, F1, L6, S24*	-	Min. 1.5-inch *Insulation*	*Preliminarily Secured* or secured with top layer	OPTIONAL *Cover Board*	*Preliminarily Secured*	*UltraPly TPO* (148-inch wide)	Attached in-lap 6-inch o.c. with *HD Fasteners & Plates*; Fastener rows 142-inch o.c.	**-52.5 (Lim. 7)**
S-M-23	*G33, P, L6, S24*	-	*Insulation*	*Preliminarily Secured* or secured with top layer	OPTIONAL *Cover Board*	*Preliminarily Secured*	*UltraPly TPO* (96-inch wide)	Attached in-lap 6-inch o.c. with *HD Fasteners & Plates*; Fastener rows 90-inch o.c.	**-52.5 (Lim. 7)**
S-M-24	*G33, P, L6, S24*	-	Min. 1-inch *Insulation*	*Preliminarily Secured* or secured with top layer	OPTIONAL *Cover Board*	*Preliminarily Secured*	Min. 60 mil *UltraPly TPO* (148-inch wide)	Attached in-lap 6-inch o.c. with *HD Fasteners & Plates*; Fastener rows 142-inch o.c.	**-52.5 (Lim. 7)**
S-M-25	*G33, L6, HXH1, HS24*	-	Min. 0.5-inch *Insulation*	*Preliminarily Secured* or secured with top layer	OPTIONAL *Cover Board*	*Preliminarily Secured*	Min. 60 mil *UltraPly TPO* (148-inch wide)	Attached in-lap 6-inch o.c. with *HD Fasteners & Plates*; Fastener rows 142-inch o.c.	**-52.2 (Lim. 7)**
S-M-26	*G33, P, L6, S24*	-	Min. 0.5-inch *Insulation*	*Preliminarily Secured* or secured with top layer	OPTIONAL *Cover Board*	*Preliminarily Secured*	*UltraPly TPO* (120-inch wide)	Attached in-lap 6-inch o.c. with *HD Fasteners & Plates*; Fastener rows 114-inch o.c.	**-52.5 (Lim. 7)**
S-M-27	*G33, F1, L6, S24*	-	Min. 1.5-inch *Insulation*	*Preliminarily Secured* or secured with top layer	OPTIONAL *Cover Board*	*Preliminarily Secured*	Min. 60 mil *UltraPly TPO* (60-inch wide)	Attached in-lap 12-inch o.c. with *HD Fasteners & Plates*; Fastener rows 54-inch o.c.	**-52.5 (Lim. 7)**
S-M-28	*G33, P, L6, S24*	-	Min. 0.5-inch *Insulation*	*Preliminarily Secured* or secured with top layer	OPTIONAL *Cover Board*	*Preliminarily Secured*	Min. 60 mil *UltraPly TPO* (120-inch wide)	Attached in-lap 6-inch o.c. with *HD Fasteners & Plates*; Fastener rows 114-inch o.c.	**-60 (Lim. 7)**
S-M-29	*G33, L6, HXH1, HS24*	-	Min. 0.5-inch *Insulation*	*Preliminarily Secured* or secured with top layer	OPTIONAL *Cover Board*	*Preliminarily Secured*	Min. 60 mil UltraPly TPO (120-inch wide)	Attached in-lap 6-inch o.c. with *HD Fasteners & Plates*; Fastener rows 114-inch o.c.	**-60 (Lim. 7)**

This evaluation report is provided for State of Florida product approval under Rule 61G20-3. The manufacturer shall notify CREEK Technical Services, LLC of any product changes or quality assurance changes throughout the duration for which this report is valid. This evaluation report does not express nor imply warranty, installation, recommended use, or other product attributes that are not specifically addressed herein.

Mechanically Fastened Assemblies over *Steel Deck* (New or Existing)									
System No.	*Deck Detail*	Air/Vapor Barrier	Base Insulation	Base Insulation Attachment	Top Insulation	Top Insulation Attachment	Membrane	Membrane Attachment	*MDP* (psf)
S-M-30	*G33, F1, L6, S24*	-	Min. 1.5-inch *Insulation*	*Preliminarily Secured* or secured with top layer	OPTIONAL *Cover Board*	*Preliminarily Secured*	*UltraPly TPO* (148-inch wide)	Attached in-lap 6-inch o.c. with *HD Plus Fasteners & Plates*; Fastener rows 142-inch o.c.	**-60 (Lim. 7)**
S-M-31	*G33, P, L6, S24*	-	Min. 0.5-inch *Insulation*	*Preliminarily Secured* or secured with top layer	OPTIONAL *Cover Board*	*Preliminarily Secured*	*UltraPly TPO* (96-inch wide)	Attached in-lap 6-inch o.c. with *HD Fasteners & Plates*; Fastener rows 89-inch o.c.; 7-inch wide side lap	**-60 (Lim. 7)**
S-M-32	*G33, F1, L6, S12*	-	Min. 0.5-inch *Insulation*	*Preliminarily Secured* or secured with top layer	OPTIONAL *Cover Board*	*Preliminarily Secured*	Min. 60 mil UltraPly TPO (120-inch wide)	Attached in-lap 6-inch o.c. with *HD Fasteners & Plates*; Fastener rows 114-inch o.c.	**-60 (Lim. 7)**
S-M-33	*G33, P, L6, S24*	-	Min. 0.5-inch *Insulation*	*Preliminarily Secured* or secured with top layer	OPTIONAL *Cover Board*	*Preliminarily Secured*	Min. 60 mil *UltraPly TPO* (96-inch wide)	Attached in-lap 6-inch o.c. with *HD Fasteners & Plates*; Fastener rows 89-inch o.c.	**-60 (Lim. 7)**
S-M-34	*G33, F, L6, S24*	-	Min. 2-inch *Insulation*	*Preliminarily Secured* or secured with top layer	OPTIONAL *Cover Board*	*Preliminarily Secured*	*UltraPly TPO* (60-inch wide)	Attached in-lap 12-inch o.c. with *HD Plus Fasteners & Plates*; Fastener rows 54-inch o.c.	**-60 (Lim. 7)**
S-M-35	*G33, F1, L6, S24*	-	Min. 1.5-inch *Insulation*	*Preliminarily Secured* or secured with top layer	OPTIONAL *Cover Board*	*Preliminarily Secured*	*UltraPly TPO* (120-inch wide)	Attached in-lap 6-inch o.c. with *HD Plus Fasteners & Plates*; Fastener rows 114-inch o.c.	**-67.5 (Lim. 7)**
S-M-36	*G33, P, L6, S24*	6 mil polyethylene sheet; 6-inch wide laps sealed with duct tape	Min. 2-inch *Insulation*	*AP Fasteners & Plates* secured *8 per 4 ft. x 8 ft. board*	OPTIONAL *Cover Board*	*Preliminarily Secured*	*UltraPly TPO* (96-inch wide)	Attached in-lap 6-inch o.c. with *HD Fasteners & Plates*; Fastener rows 89-inch o.c.	**-67.5 (Lim. 7)**
S-M-37	*G33, P, L6*	-	Min. 0.5-inch *Insulation*	*Preliminarily Secured* or secured with top layer	OPTIONAL *Cover Board*	*Preliminarily Secured*	*UltraPly TPO* (120-inch wide)	Attached in-lap 6-inch o.c. with *HD Plus Fasteners & Plates*; Fastener rows 114-inch o.c.	**-67.5 (Lim. 7)**

This evaluation report is provided for State of Florida product approval under Rule 61G20-3. The manufacturer shall notify CREEK Technical Services, LLC of any product changes or quality assurance changes throughout the duration for which this report is valid. This evaluation report does not express nor imply warranty, installation, recommended use, or other product attributes that are not specifically addressed herein.

Mechanically Fastened Assemblies over *Steel Deck* (New or Existing)									
System No.	*Deck Detail*	Air/Vapor Barrier	Base Insulation	Base Insulation Attachment	Top Insulation	Top Insulation Attachment	Membrane	Membrane Attachment	*MDP* (psf)
S-M-38	*G33, F1, L6, S24*	-	Min. 0.5-inch *Insulation*	*Preliminarily Secured* or secured with top layer	OPTIONAL *Cover Board*	*Preliminarily Secured*	*UltraPly TPO* (120-inch wide)	Attached in-lap 6-inch o.c. with Heavy-Duty Plus Fasteners and Polymer Batten Strips; Fastener rows 114-inch o.c.; Min. 5-inch wide heat weld encapsulating batten and fasteners	**-75 (Lim. 7)**
S-M-39	*G80, F1, L6, S24*	-	Min. 0.5-inch *Insulation*	*Preliminarily Secured* or secured with top layer	OPTIONAL *Cover Board*	*Preliminarily Secured*	*UltraPly TPO* (120-inch wide)	Attached in-lap 6-inch o.c. with Heavy-Duty Fasteners and Coiled Metal Batten Bar; Fastener rows 114-inch o.c.; Min. 5-inch wide heat weld encapsulating batten and fasteners	**-75 (Lim. 7)**
S-M-40	*G33, F1, L6, S24*	(2) layers of V-Force Vapor Barrier Membrane installed as *Air Barrier*	OPTIONAL *Insulation*	*Preliminarily Secured* or secured with top layer	Min. 3-inch *ISO*, *ISO CG* or ISOGARD HD Composite	Insulation Fastening Plates and Elevate Heavy Duty fasteners secured *6 per 4-ft x 8-ft board*	*UltraPly TPO* (148-inch wide)	Attached in-lap 12-inch o.c. with *HD Fasteners & Plates;* Side laps spaced 142-inch o.c.	**-82.5 (Lim. 7)**
S-M-41	*G80, F2, L6, S24*	-	Min. 1.5-inch *Insulation*	*Preliminarily Secured* or secured with top layer	OPTIONAL *Cover Board*	*Preliminarily Secured*	*UltraPly TPO* (74-inch wide)	Heavy Duty Fasteners and 0.75" Polymer Batten Strips centered in-lap and fastened 6-inch o.c.; Fastener rows 68-inch o.c.; Min. 5-inch wide heat weld encapsulating plates and fasteners	**-82.5 (Lim. 7)**
S-M-42	*G80, F1, L6, S24*	-	Min. 0.5-inch *Insulation*	*Preliminarily Secured* or secured with top layer	OPTIONAL *Cover Board*	*Preliminarily Secured*	*UltraPly TPO* (96-inch wide)	Attached in-lap 6-inch o.c. with *HD Plus Fasteners & Plates*; Fastener rows 90-inch o.c.; Min. 5-inch wide heat weld encapsulating plates and fasteners	**-82.5 (Lim. 7)**

This evaluation report is provided for State of Florida product approval under Rule 61G20-3. The manufacturer shall notify CREEK Technical Services, LLC of any product changes or quality assurance changes throughout the duration for which this report is valid. This evaluation report does not express nor imply warranty, installation, recommended use, or other product attributes that are not specifically addressed herein.

Mechanically Fastened Assemblies over *Steel Deck* (New or Existing)									
System No.	*Deck Detail*	Air/Vapor Barrier	Base Insulation	Base Insulation Attachment	Top Insulation	Top Insulation Attachment	Membrane	Membrane Attachment	*MDP* (psf)
S-M-43	*G80, F1, L6, S24*	-	Min. 0.5-inch *Insulation*	*Preliminarily Secured* or secured with top layer	OPTIONAL *Cover Board*	*Preliminarily Secured*	*UltraPly TPO* (96-inch wide)	Attached in-lap 6-inch o.c. with Heavy-Duty Plus Fasteners and Coiled Metal Batten Bar;; Fastener rows 90-inch o.c.; Min. 5-inch wide heat weld encapsulating batten and fasteners	**-97.5 (Lim. 7)**
S-M-44	*G33, F1, L6, S24*	-	Min. 0.5-inch *Insulation*	*Preliminarily Secured* or secured with top layer	OPTIONAL *Cover Board*	*Preliminarily Secured*	Min. 60 mil *UltraPly TPO* (96-inch wide)	Attached in-lap 6-inch o.c. with *HD Plus Fasteners & Plates*; Fastener rows 90-inch o.c.; Min. 5-inch wide heat weld encapsulating plates and fasteners	**-112.5 (Lim. 7)**
S-M-45	*G80, F2, L6, S24*	-	Min. 1.5-inch *Insulation*	*Preliminarily Secured* or secured with top layer	OPTIONAL *Cover Board*	*Preliminarily Secured*	*UltraPly TPO* (148-inch wide)	Heavy Duty Plus Fasteners and 0.75" Polymer Batten Strips centered in-lap and fastened 6-inch o.c.; Intermediate row in field of sheet with fasteners 6-inch o.c.; Fastener rows spaced 71-inch o.c.; Min. 5-inch wide heat weld encapsulating plates and fasteners in-lap; 5-inch wide *UltraPly TPO* cover strip heat welded 1.5-inch wide on either side of battens in field row	**-135 (Lim. 7)**

This evaluation report is provided for State of Florida product approval under Rule 61G20-3. The manufacturer shall notify CREEK Technical Services, LLC of any product changes or quality assurance changes throughout the duration for which this report is valid. This evaluation report does not express nor imply warranty, installation, recommended use, or other product attributes that are not specifically addressed herein.

Induction Welded Assemblies over *Steel Deck* (New or Existing)									
System No.	*Deck Detail*	Vapor Barrier	Base Insulation	Base Insulation Attachment	Top Insulation	Top Insulation Attachment	Membrane	Membrane Attachment	*MDP* (psf)
S-W-1	*G33*	-	Min. 1.5-inch *Insulation*	*Preliminarily Secured* or secured with top layer	OPTIONAL *Cover Board*	*Invisiweld-S II* fastened at a rate of *6 per 4 ft. x 8 ft. board;* Plate pattern offset 12-inches from each adjacent row of insulation boards; Boards set with length perpendicular to deck ribs	*UltraPly TPO*	Induction welded to Invisiweld-S plates	**-37.5 (Lim. 7 Non-HVHZ)**
S-W-2	*G33, L6, F1* or *P*	-	Min. 1.5-inch *Insulation*	*Preliminarily Secured* or secured with top layer	OPTIONAL *Cover Board*	*Invisiweld-S II II* fastened 12-inch o.c. in rows 5-ft o.c.	*UltraPly TPO*	Induction welded to Invisiweld-S plates	**-37.5 (Lim. 7 Non-HVHZ)**
S-W-3	*G33, L6,P, S24*	-	Min. 1-inch *Insulation*	*Preliminarily Secured* or secured with top layer	OPTIONAL *Cover Board*	*InvisiWeld* fastened 6-inch o.c. in rows spaced 144-inch o.c.	*UltraPly TPO*	Induction welded to InvisiWeld plates	**-37.5 (Lim. 7; Non-HVHZ)**
S-W-4	*G33, L6,F1, S30*	-	Min. 1.5-inch *Insulation*	*Preliminarily Secured* or secured with top layer	OPTIONAL *Cover Board*	*Invisiweld-S II* fastened at a rate of *8 per 4 ft. x 8 ft. board;* Plate pattern offset 12-inches from each adjacent row of insulation boards; Boards set with length perpendicular to deck ribs	*UltraPly TPO*	Induction welded to Invisiweld-S plates	**-45 (Lim. 7)**
S-W-5	*G33, L6, F1* or *P*	-	Min. 1.5-inch *Insulation*	*Preliminarily Secured* or secured with top layer	OPTIONAL *Cover Board*	*Invisiweld-S II* fastened at a rate of 1 fastener per 6 ft^2 in a staggered, 2 ft. x 3 ft. grid	*UltraPly TPO*	Induction welded to Invisiweld-S plates	**-45 (Lim. 7)**
S-W-6	*G33, L5*	-	Min. 1.5-inch *Insulation*	*Preliminarily Secured* or secured with top layer	OPTIONAL *Cover Board*	*InvisiWeld* fastened at a rate of *6 per 4 ft. x 8 ft. board;* Plate pattern offset 12-inches from each adjacent row of insulation boards; Boards set with length perpendicular to deck ribs	*UltraPly TPO*	Induction welded to InvisiWeld plates	**-45 (Lim. 7 ; Non-HVHZ)**
S-W-7	*G33, P, L6, S24*	-	Min. 1-inch *Insulation*	*Preliminarily Secured* or secured with top layer	OPTIONAL *Cover Board*	*InvisiWeld* fastened at a rate of *8 per 4 ft. x 8 ft. board*	*UltraPly TPO*	Induction welded to InvisiWeld plates	**-45 (Lim. 7)**

This evaluation report is provided for State of Florida product approval under Rule 61G20-3. The manufacturer shall notify CREEK Technical Services, LLC of any product changes or quality assurance changes throughout the duration for which this report is valid. This evaluation report does not express nor imply warranty, installation, recommended use, or other product attributes that are not specifically addressed herein.

Induction Welded Assemblies over *Steel Deck* (New or Existing)									
System No.	*Deck Detail*	Vapor Barrier	Base Insulation	Base Insulation Attachment	Top Insulation	Top Insulation Attachment	Membrane	Membrane Attachment	*MDP* (psf)
S-W-8	*G80, F2, L7, S24*	-	Min. 1-inch *Insulation*	*Preliminarily Secured* or secured with top layer	OPTIONAL *Cover Board*	*InvisiWeld* fastened 12" o.c. in rows 6-ft o.c. over *Preliminarily Secured* board	Min. 60 mil UltraPly TPO	Induction welded to InvisiWeld plates	**-45 (Lim. 7)**
S-W-9	*G33, F1, L6, S24*	V-Force Vapor Barrier Membrane installed as *Air Barrier*	OPTIONAL *Insulation*	*Preliminarily Secured* or secured with top layer	Min. 2.5-inch *ISO*, *ISO CG* or *ISO HD-C*	*InvisiWeld* fastened at a rate of *8 per 4 ft. x 8 ft. board*	*UltraPly TPO*	Induction welded to InvisiWeld plates	**-52.5 (Lim. 7)**
S-W-10	*G33, F1, L6, S24*	V-Force Vapor Barrier Membrane installed as *Air Barrier* adhered over loose-laid *SECUROCK*	OPTIONAL *Insulation*	*Preliminarily Secured* or secured with top layer	Min. 2.5-inch *ISO*, *ISO CG* or *ISO HD-C*	*InvisiWeld* fastened at a rate of *8 per 4 ft. x 8 ft. board*	*UltraPly TPO*	Induction welded to InvisiWeld plates	**-52.5 (Lim. 7)**
S-W-11	22 GA Type N; *G80, HXH1, L12, HS24*	-	Min. 1-inch *Insulation*	*Preliminarily Secured* or secured with top layer	OPTIONAL *Cover Board*	*Invisiweld-S* fastened at a rate of *8 per 4 ft. x 8 ft. board;* Plate pattern offset 8-inches from each adjacent row of insulation boards; Boards set with length perpendicular to deck ribs	*UltraPly TPO*	Induction welded to InvisiWeld plates	**-52.5 (Lim. 7)**
S-W-12	*G33, F1, L6, S30*	-	Min. 1.5-inch *Insulation*	*Preliminarily Secured* or secured with top layer	OPTIONAL *Cover Board*	*InvisiWeld* fastened at a rate of *8 per 4 ft. x 8 ft. board;* Plate pattern offset 12-inches from each adjacent row of insulation boards; Boards set with length perpendicular to deck ribs	*UltraPly TPO*	Induction welded to InvisiWeld plates	**-60 (Lim. 7)**
S-W-13	*G33, L6, F1* or *P*	-	Min. 1.5-inch *Insulation*	*Preliminarily Secured* or secured with top layer	OPTIONAL *Cover Board*	*Invisiweld-S II* fastened at a rate of 1 fastener per 4 ft^2 in a staggered 2 ft x 2 ft grid	*UltraPly TPO*	Induction welded to Invisiweld-S plates	**-60 (Lim. 7)**
S-W-14	*G80, F2, L7, S24*	-	Min. 1-inch *Insulation*	*Preliminarily Secured* or secured with top layer	OPTIONAL *Cover Board*	*InvisiWeld* fastened at a rate of *8 per 4 ft. x 8 ft. board*	Min. 60 mil UltraPly TPO	Induction welded to InvisiWeld plates	**-60 (Lim. 7)**

This evaluation report is provided for State of Florida product approval under Rule 61G20-3. The manufacturer shall notify CREEK Technical Services, LLC of any product changes or quality assurance changes throughout the duration for which this report is valid. This evaluation report does not express nor imply warranty, installation, recommended use, or other product attributes that are not specifically addressed herein.

Induction Welded Assemblies over *Steel Deck* (New or Existing)									
System No.	*Deck Detail*	Vapor Barrier	Base Insulation	Base Insulation Attachment	Top Insulation	Top Insulation Attachment	Membrane	Membrane Attachment	*MDP* (psf)
S-W-15	*G33, L6, HXE1, HS24*	-	Min. 1-inch *Insulation*	*Preliminarily Secured* or secured with top layer	OPTIONAL *Cover Board*	*InvisiWeld* fastened 6-inch o.c. in rows spaced 144-inch o.c.	*UltraPly TPO*	Induction welded to InvisiWeld plates	**-60 (Lim. 7)**
S-W-16	*G33, L6,F1, S30*	-	Min. 1.5-inch *Insulation*	*Preliminarily Secured* or secured with top layer	OPTIONAL *Cover Board*	*Invisiweld-S* fastened at a rate of *10 per 4 ft. x 8 ft. board;* Plate pattern offset 12-inches from each adjacent row of insulation boards; Boards set with length perpendicular to deck ribs	*UltraPly TPO*	Induction welded to Invisiweld-S plates	**-75 (Lim. 7)**
S-W-17	*G33, F1, L6, S30*	-	Min. 1.5-inch *Insulation*	*Preliminarily Secured* or secured with top layer	OPTIONAL *Cover Board*	*InvisiWeld* fastened at a rate of *12 per 4 ft. x 8 ft. board;* Plate pattern offset 12-inches from each adjacent row of insulation boards; Boards set with length perpendicular to deck ribs	*UltraPly TPO*	Induction welded to InvisiWeld plates	**-75 (Lim. 7)**
S-W-18	*G33, P, L6, S24*	-	Min. 0.5-inch *Insulation*	*Preliminarily Secured* or secured with top layer	OPTIONAL *Cover Board*	*InvisiWeld* fastened at a rate of *12 per 4 ft. x 8 ft. board (Alt. Pattern)*	*UltraPly TPO*	Induction welded to InvisiWeld plates	**-75 (Lim. 7)**
S-W-19	22 GA Type N; *G80, HXH1, L12, HS24*	-	Min. 1-inch *Insulation*	*Preliminarily Secured* or secured with top layer	OPTIONAL *Cover Board*	*Invisiweld-S* fastened at a rate of 12 *per 4 ft. x 8 ft. board;* Plate pattern offset 8-inches from each adjacent row of insulation boards; Boards set with length perpendicular to deck ribs	Min. 60 mil UltraPly TPO	Induction welded to InvisiWeld plates	**-75 (Lim. 7)**
S-W-20	*G33, L6, F1* or *P*	-	Min. 1.5-inch *Insulation*	*Preliminarily Secured* or secured with top layer	OPTIONAL *Cover Board*	*Invisiweld-S II* fastened at a rate of 1 fastener per 3-ft^2 in a staggered1.5 ft x 2 ft grid	*UltraPly TPO*	Induction welded to Invisiweld-S plates	**-82.5 (Lim. 7)**
S-W-21	*G33, L6, HXE1, HS24*	-	Min. 1-inch *Insulation*	*Preliminarily Secured* or secured with top layer	OPTIONAL *Cover Board*	*InvisiWeld* fastened 6-inch o.c. in rows spaced 72-inch o.c.	*UltraPly TPO*	Induction welded to InvisiWeld plates	**-82.5 (Lim. 7)**

This evaluation report is provided for State of Florida product approval under Rule 61G20-3. The manufacturer shall notify CREEK Technical Services, LLC of any product changes or quality assurance changes throughout the duration for which this report is valid. This evaluation report does not express nor imply warranty, installation, recommended use, or other product attributes that are not specifically addressed herein.

Induction Welded Assemblies over *Steel Deck* (New or Existing)									
System No.	*Deck Detail*	Vapor Barrier	Base Insulation	Base Insulation Attachment	Top Insulation	Top Insulation Attachment	Membrane	Membrane Attachment	*MDP* (psf)
S-W-22	*G80, L6, F1* or *P*	-	Min. 1.5-inch *Insulation*	*Preliminarily Secured* or secured with top layer	OPTIONAL *Cover Board*	*Invisiweld-S II* fastened 6-inch o.c. in rows 60-inch o.c.	*UltraPly TPO*	Induction welded to Invisiweld-S plates	**-90 (Lim. 7)**
S-W-23	*G3, F2, L6, S12*	-	Min. 1.5-inch *Insulation*	*Preliminarily Secured* or secured with top layer	OPTIONAL *Cover Board*	*InvisiWeld* fastened at a rate of *16 per 4 ft. x 8 ft. board;* Plate pattern offset 12-inches from each adjacent row of insulation boards; Boards set with length perpendicular to deck ribs	*UltraPly TPO*	Induction welded to InvisiWeld plates	**-105 (Lim. 7)**

Assemblies with All Layers Adhered over *Wood Deck* (New or Existing)								
System No.	*Deck Detail*	Base Insulation	Base Insulation Attachment	Top Insulation	Top Insulation Attachment	Membrane	Membrane Attachment	*MDP* (psf)
W-A-1	*T15/32P*	OPTIONAL *DensDeck Prime*	I.S.O. Stick; ribbons 12-inch o.c.	Min. 1-inch *ISO CG* or *ISO*	I.S.O. Stick; ribbons 12-inch o.c.	*UltraPly TPO* or *UltraPly TPO FA*	*Membrane Adhesive IV*	**-45 (Lim. 9; Non-HVHZ)**
						UltraPly TPO FSA	Self-adhered	
W-A-2	*T7/16O* or *T15/32P, L24*	*DensDeck Prime*	I.S.O. Twin Pack; ribbons 12-inch o.c.	-	-	*UltraPly TPO* or *UltraPly TPO FA*	*Membrane Adhesive IV*	**-45 (Lim. 9; Non-HVHZ)**
						UltraPly TPO FSA	Self-adhered	
						UltraPly TPO XR	*XR-BA, PermaMop; HA;* or *TJ-S*	
W-A-4	*T19/32O, L24, N6/6*	*DensDeck Prime* or *SECUROCK*	I.S.O. Fix II; ribbons 6-inch o.c.	-	-	*UltraPly TPO*	*Membrane Adhesive V*	**-67.5 (Lim. 9; Non-HVHZ)**
						UltraPly TPO FA	*Membrane Adhesive IV*	
						UltraPly TPO FSA	Self-adhered	
						UltraPly TPO XR	*PermaMop; HA*	
W-A-5	*T7/16O, L24, N6/6*	*DensDeck Prime*	I.S.O. Spray R ribbons spaced 12-inch o.c.	-	-	*UltraPly TPO XR*	I.S.O. Spray R or *TJ-R* ribbons spaced 12-inch o.c.; or *TJ-S*	**-75 (Lim. 9; Non-HVHZ)**

This evaluation report is provided for State of Florida product approval under Rule 61G20-3. The manufacturer shall notify CREEK Technical Services, LLC of any product changes or quality assurance changes throughout the duration for which this report is valid. This evaluation report does not express nor imply warranty, installation, recommended use, or other product attributes that are not specifically addressed herein.

Assemblies with All Layers Adhered over *Wood Deck* (New or Existing)								
System No.	*Deck Detail*	Base Insulation	Base Insulation Attachment	Top Insulation	Top Insulation Attachment	Membrane	Membrane Attachment	*MDP* (psf)
W-A-6	*T15/32P, L24, N6/6*	0.5-inch *DensDeck Prime*	I.S.O. Fix II; ribbons 6-inch o.c.	-	-	*UltraPly TPO*	*Membrane Adhesive V*	**-75 (Lim. 9; Non-HVHZ)**
						UltraPly TPO FA	*Membrane Adhesive IV*	
						UltraPly TPO FSA	Self-adhered	
						UltraPly TPO XR	*XR-BA, PermaMop; HA;* or *TJ-S*	
W-A-7	*T15/32P, L24, N6/6*	0.5-inch *DensDeck Prime*	I.S.O. Spray R ribbons spaced 6-inch o.c.	-	-	*UltraPly TPO*	*Membrane Adhesive II*	**-90 (Lim. 9; Non-HVHZ)**
						UltraPly TPO FA	*Membrane Adhesive I*	
						UltraPly TPO FSA	Self-adhered	
						UltraPly TPO XR	*XR-BA, PermaMop; HA;* or *TJ-S*	
W-A-8	*T7/16O, L24, N6/6*	*SECUROCK*	I.S.O. Spray R ribbons spaced 6-inch o.c.	-	-	*UltraPly TPO XR*	I.S.O. Spray R or *TJ-R* ribbons spaced 6-inch o.c.; or *TJ-S*	**-90 (Lim. 9; Non-HVHZ)**

Assemblies with Adhered Membranes over Insulated *Wood Deck* (New, Existing or *Recover*)								
System No.	*Deck Detail*	Base Insulation or Base Sheet	Base Insulation or Base Sheet Attachment	Top Insulation	Top Insulation Attachment	Membrane	Membrane Attachment	*MDP* (psf)
W-AM-1	*T7/16O*	OPTIONAL *Insulation*	*Preliminarily Secured* or secured with top layer	*SECUROCK*	*HD Fasteners & Plates* secured at a rate of 10 *per 4-ft x 8-ft board (Alt. Pattern)*	*UltraPly TPO*	*Membrane Adhesive V*	**-30 (Lim. 7; Non-HVHZ)**
						UltraPly TPO FA	*Membrane Adhesive IV*	
						UltraPly TPO FSA	Self-adhered	
						UltraPly TPO XR	*XR-BA, PermaMop; HA;* or *TJ-S*	
W-AM-2	*T15/32P, L24*	OPTIONAL *Insulation*	*Preliminarily Secured* or secured with top layer	Min. 0.5-inch *SECUROCK*	*AP Fasteners & Plates* secured at a rate of *8 per 4-ft x 8-ft board*	*UltraPly TPO*	*Membrane Adhesive V*	**-37.5 (Lim. 7; Non-HVHZ)**
						UltraPly TPO FA	*Membrane Adhesive IV*	
						UltraPly TPO FSA	Self-adhered	
						UltraPly TPO XR	*XR-BA, PermaMop; HA;* or *TJ-S*	

This evaluation report is provided for State of Florida product approval under Rule 61G20-3. The manufacturer shall notify CREEK Technical Services, LLC of any product changes or quality assurance changes throughout the duration for which this report is valid. This evaluation report does not express nor imply warranty, installation, recommended use, or other product attributes that are not specifically addressed herein.

Assemblies with Adhered Membranes over Insulated *Wood Deck* (New, Existing or *Recover*)								
System No.	*Deck Detail*	Base Insulation or Base Sheet	Base Insulation or Base Sheet Attachment	Top Insulation	Top Insulation Attachment	Membrane	Membrane Attachment	*MDP* (psf)
W-AM-3	*T7/16O or T15/32P, L24*	OPTIONAL *Insulation*	*Preliminarily Secured* or secured with top layer	*DensDeck*	*AP Fasteners & Plates* secured at a rate of *12 per 4-ft x 8-ft board*	*UltraPly TPO*	*Membrane Adhesive V*	**-37.5 (Lim. 7; Non-HVHZ)**
						UltraPly TPO FA	*Membrane Adhesive IV*	
						UltraPly TPO FSA	Self-adhered	
						UltraPly TPO XR	*XR-S, TJ-R,* or I.S.O. Spray R ribbon adhered 12-inch o.c.; *HA; PermaMop; XR-BA; JBSA* or *TJ-S*	
W-AM-4	*T7/16O* or *T15/32P, L24*	SBS Base	32 ga. x 1-5/8" tin tabs and 12 ga. x 1.25" ring shank nails 6-inch o.c. in 3-inch lap and 6-inch o.c. in three (3) staggered rows equally spaced between laps	-	-	*UltraPly TPO XR*	*XR-S* or I.S.O. Spray R; ribbons spaced 12-inch o.c.; or *TJ-S*	**-37.5 (Lim. 7; Non-HVHZ)**
W-AM-5	*T19/32P, L24*	OPTIONAL *Insulation*	*Preliminarily Secured* or secured with top layer	*ISO HD*	*AP Fasteners & Plates* secured at a rate of *12 per 4-ft x 8-ft board*	Min. 60 mil UltraPly TPO	*Membrane Adhesive V*	**-37.5 (Lim. 7; Non-HVHZ)**
						UltraPly TPO FA	*Membrane Adhesive IV*	
						UltraPly TPO FSA	Self-adhered	
W-AM-6	*T7/16O, L24, N6/6*	OPTIONAL *Insulation*	*Preliminarily Secured* or secured with top layer	Min. 1-inch *ISO CG*	*AP Fasteners & Plates* secured at a rate of *18 per 4-ft x 8-ft board*	*UltraPly TPO*	*Membrane Adhesive V*	**-37.5 (Lim. 7; Non-HVHZ)**
						UltraPly TPO FA	*Membrane Adhesive IV*	
						UltraPly TPO FSA	Self-adhered	
						UltraPly TPO XR	*XR-S, TJ-R,* ribbon adhered 6-inch o.c. or I.S.O. Spray R ribbon adhered 12-inch o.c.; *JBSA* or *TJ-S*	
W-AM-7	*T19/32P, L24*	OPTIONAL *Insulation*	*Preliminarily Secured* or secured with top layer	2-inch *ISO CG*	*AP Fasteners & Plates* secured at a rate of *8 per 4-ft x 8-ft board*	Min. 60 mil UltraPly TPO	*Membrane Adhesive V*	**-42.5 (Lim. 7; Non-HVHZ)**
						UltraPly TPO FA	*Membrane Adhesive IV*	
						UltraPly TPO FSA	Self-adhered	

This evaluation report is provided for State of Florida product approval under Rule 61G20-3. The manufacturer shall notify CREEK Technical Services, LLC of any product changes or quality assurance changes throughout the duration for which this report is valid. This evaluation report does not express nor imply warranty, installation, recommended use, or other product attributes that are not specifically addressed herein.

Assemblies with Adhered Membranes over Insulated *Wood Deck* (New, Existing or *Recover*)								
System No.	*Deck Detail*	Base Insulation or Base Sheet	Base Insulation or Base Sheet Attachment	Top Insulation	Top Insulation Attachment	Membrane	Membrane Attachment	*MDP* (psf)
W-AM-8	*T15/32P, L24, N12/6*	OPTIONAL *Insulation*	*Preliminarily Secured* or secured with top layer	*SECUROCK*	*AP Fasteners & Plates* secured at a rate of *20 per 4-ft x 8-ft board*	*UltraPly TPO*	*Membrane Adhesive V*	**-45 (Lim. 7)**
						UltraPly TPO FA	*Membrane Adhesive IV*	
						UltraPly TPO FSA	Self-adhered	
						UltraPly TPO SA (HVHZ ONLY)	Self-Adhered	
						UltraPly TPO XR	*XR-S, TJ-R,* or I.S.O. Spray R ribbon adhered 12-inch o.c.; *HA; PermaMop; XR-BA; JBSA* or *TJ-S*	
W-AM-9	*T7/16O or T15/32P, L24*	OPTIONAL *Insulation*	*Preliminarily Secured* or secured with top layer	*DensDeck Prime or SECUROCK*	*AP Fasteners & Plates* secured at a rate of *12 per 4-ft x 8-ft board*	*UltraPly TPO*	*Membrane Adhesive V*	**-45 (Lim. 7; Non-HVHZ)**
						UltraPly TPO FA	*Membrane Adhesive IV*	
						UltraPly TPO FSA	Self-adhered	
						UltraPly TPO XR	*XR-S, TJ-R,* or I.S.O. Spray R ribbon adhered 12-inch o.c.; *HA; PermaMop; XR-BA; JBSA* or *TJ-S*	
W-AM-10	*T15/32P, L24*	OPTIONAL *Insulation*	*Preliminarily Secured* or secured with top layer	Min. 0.5-inch SECUROCK	*AP Fasteners & Plates* secured at a rate of *8 per 4 ft. x 8 ft. board*	*UltraPly TPO*	*Membrane Adhesive V*	**-45 (Lim. 7; Non-HVHZ)**
						UltraPly TPO FA	*Membrane Adhesive IV*	
						UltraPly TPO FSA	Self-adhered	
						UltraPly TPO XR	*XR-S, TJ-R,* or I.S.O. Spray R ribbon adhered 12-inch o.c.; *HA; PermaMop; XR-BA; JBSA* or *TJ-S*	
W-AM-11	*T15/32P, L24, N6/6*	OPTIONAL *Insulation*	*Preliminarily Secured* or secured with top layer	Min. 1-inch *ISO CG*	*AP Fasteners & Plates* secured at a rate of *20 per 4-ft x 8-ft board*	*UltraPly TPO* or *UltraPly TPO FA*	UltraPly Bonding adhesive or *JBSA*	**-45 (Lim. 7)**
						UltraPly TPO FSA	Self-adhered	
						UltraPly TPO SA (HVHZ ONLY)	Self-Adhered	

This evaluation report is provided for State of Florida product approval under Rule 61G20-3. The manufacturer shall notify CREEK Technical Services, LLC of any product changes or quality assurance changes throughout the duration for which this report is valid. This evaluation report does not express nor imply warranty, installation, recommended use, or other product attributes that are not specifically addressed herein.

Assemblies with Adhered Membranes over Insulated *Wood Deck* (New, Existing or *Recover*)								
System No.	*Deck Detail*	Base Insulation or Base Sheet	Base Insulation or Base Sheet Attachment	Top Insulation	Top Insulation Attachment	Membrane	Membrane Attachment	*MDP* (psf)
W-AM-12	*T15/32, L24, N6/6*	OPTIONAL *Insulation*	*Preliminarily Secured* or secured with top layer	*DensDeck Prime*	*AP Fasteners & Plates* secured at a rate of *18 per 4-ft x 8-ft board*	*UltraPly TPO*	*Membrane Adhesive V*	**-45 (Lim. 7)**
						UltraPly TPO FA	*Membrane Adhesive IV*	
						UltraPly TPO FSA	Self-adhered	
						UltraPly TPO SA (HVHZ ONLY)	Self-Adhered	
						UltraPly TPO XR	*XR-S, TJ-R,* or I.S.O. Spray R ribbon adhered 12-inch o.c.; *HA; PermaMop; XR-BA; JBSA* or *TJ-S*	
W-AM-13	*T15/32P, L24, N6/6*	OPTIONAL *Insulation*	*Preliminarily Secured* or secured with top layer	SBS Base-P	*AP Fasteners & Plates* 12-inch o.c. in 3-3/8" lap and 12-inch o.c. in two (2) evenly spaced staggered rows	*UltraPly TPO XR*	I.S.O. Spray R ribbon adhered 12-inch o.c	**-45 (Lim. 7)**
W-AM-14	*T15/32P, L24, N6/6*	OPTIONAL *Insulation*	*Preliminarily Secured* or secured with top layer	Min. 1.5-inch ISOGARD HD Composite	*AP Fasteners & Plates* secured at a rate of *12 per 4-ft x 8-ft board*	*UltraPly TPO*	*Membrane Adhesive V*	**-45 (Lim. 7)**
						UltraPly TPO FA	*Membrane Adhesive IV*	
						UltraPly TPO FSA	Self-adhered	
						UltraPly TPO SA (HVHZ ONLY)	Self-Adhered	
						UltraPly TPO XR	*XR-S, TJ-R,* or I.S.O. Spray R ribbon adhered 12-inch o.c; *JBSA* or *TJ-S*	
W-AM-15	*T7/16O, L24, N6/6*	OPTIONAL *Insulation*	*Preliminarily Secured* or secured with top layer	*SECUROCK, DensDeck Prime*	*AP Fasteners & Plates* secured at a rate of *20 per 4-ft x 8-ft board*	*UltraPly TPO XR*	*HA; PermaMop; XR-BA;* or *TJ-S*	**-45 (Lim. 7; Non-HVHZ)**
W-AM-16	*T7/16O, L24, N6/6*	OPTIONAL *Insulation*	*Preliminarily Secured* or secured with top layer	*DensDeck Prime, SECUROCK,* Min. 1-inch *ISO CG* or Min. 1.5-inch ISOGARD HD Composite	*AP Fasteners & Plates* secured at a rate of *20 per 4-ft x 8-ft board*	*UltraPly TPO*	*Membrane Adhesive V*	**-45 (Lim. 7; Non-HVHZ)**
						UltraPly TPO FA	*Membrane Adhesive IV*	
						UltraPly TPO FSA	Self-adhered	
						UltraPly TPO XR	*XR-S, TJ-R,* ribbon adhered 6-inch o.c. or I.S.O. Spray R ribbon adhered 12-inch o.c.; or *TJ-S*	

This evaluation report is provided for State of Florida product approval under Rule 61G20-3. The manufacturer shall notify CREEK Technical Services, LLC of any product changes or quality assurance changes throughout the duration for which this report is valid. This evaluation report does not express nor imply warranty, installation, recommended use, or other product attributes that are not specifically addressed herein.

Assemblies with Adhered Membranes over Insulated *Wood Deck* (New, Existing or *Recover*)								
System No.	*Deck Detail*	Base Insulation or Base Sheet	Base Insulation or Base Sheet Attachment	Top Insulation	Top Insulation Attachment	Membrane	Membrane Attachment	*MDP* (psf)
W-AM-17	*T7/16O, L24, N6/6*	OPTIONAL *Insulation*	*Preliminarily Secured* or secured with top layer	Min. 0.5-inch DensDeck Prime or Min. 0.5-inch *SECUROCK*	*AP Fasteners & Plates* secured at a rate of *18 per 4-ft x 8-ft board*	*UltraPly TPO XR*	*HA; PermaMop; XR-BA;* or *TJ-S*	**-45 (Lim. 7; Non-HVHZ)**
W-AM-18	*T7/16O, L24, N6/6*	OPTIONAL *Insulation*	*Preliminarily Secured* or secured with top layer	Min. 0.5-inch DensDeck Prime, Min. 0.5-inch *SECUROCK,* Min. 2-inch *ISO CG* or Min. 1.5-inch ISOGARD HD Composite	*AP Fasteners & Plates* secured at a rate of *18 per 4-ft x 8-ft board*	*UltraPly TPO*	*Membrane Adhesive V*	**-45 (Lim. 7; Non-HVHZ)**
						UltraPly TPO FA	*Membrane Adhesive IV*	
						UltraPly TPO FSA	Self-adhered	
						UltraPly TPO XR	*XR-S, TJ-R,* ribbon adhered 6-inch o.c. or I.S.O. Spray R ribbon adhered 12-inch o.c.; *JBSA* or *TJ-S*	
W-AM-19	*T15/32P, L24*	OPTIONAL *Insulation*	*Preliminarily Secured* or secured with top layer	Min. 2-inch *ISO CG* or *ISO*	*HD Fasteners and Plates* secured at a rate of *8 per 4-ft x 8-ft board*	*UltraPly TPO*	*Membrane Adhesive V*	**-45 (Lim. 7; Non-HVHZ)**
						UltraPly TPO FA	*Membrane Adhesive IV*	
						UltraPly TPO FSA	Self-adhered	
						UltraPly TPO XR	*XR-S, TJ-R,* or I.S.O. Spray R ribbon adhered 12-inch o.c.; *JBSA* or *TJ-S*	
W-AM-20	*T15/32P, L24*	OPTIONAL *Insulation*	*Preliminarily Secured* or secured with top layer	Min. 1.5-inch *ISO CG* or *ISO*	*HD Fasteners and Plates* secured at a rate of *12 per 4-ft x 8-ft board*	*UltraPly TPO*	*Membrane Adhesive V*	**-45 (Lim. 7; Non-HVHZ)**
						UltraPly TPO FA	*Membrane Adhesive IV*	
						UltraPly TPO FSA	Self-adhered	
						UltraPly TPO XR	*XR-S, TJ-R,* or I.S.O. Spray R ribbon adhered 12-inch o.c.; *JBSA* or *TJ-S*	
W-AM-21	*T7/16O, L24, N6/6*	OPTIONAL *Insulation*	*Preliminarily Secured* or secured with top layer	Min. 0.5-inch *DenDeck* or *SECUROCK*	*AP Fasteners & Plates* secured at a rate of 24 *per 4-ft x 8-ft board per 4-ft x 8-ft board*	*UltraPly TPO*	*Membrane Adhesive V*	**-45 (Lim. 7; Non-HVHZ)**
						UltraPly TPO FA	*Membrane Adhesive IV*	
						UltraPly TPO FSA	Self-adhered	
						UltraPly TPO XR	*XR-S, TJ-R,* or I.S.O. Spray R ribbon adhered 12-inch o.c.; *HA; PermaMop; XR-BA; JBSA* or *TJ-S*	

This evaluation report is provided for State of Florida product approval under Rule 61G20-3. The manufacturer shall notify CREEK Technical Services, LLC of any product changes or quality assurance changes throughout the duration for which this report is valid. This evaluation report does not express nor imply warranty, installation, recommended use, or other product attributes that are not specifically addressed herein.

Assemblies with Adhered Membranes over Insulated *Wood Deck* (New, Existing or *Recover*)								
System No.	*Deck Detail*	Base Insulation or Base Sheet	Base Insulation or Base Sheet Attachment	Top Insulation	Top Insulation Attachment	Membrane	Membrane Attachment	*MDP* (psf)
W-AM-22	*T15/32P, L24, N6/6*	OPTIONAL *Insulation*	*Preliminarily Secured* or secured with top layer	Min. 0.5-inch *DensDeck Prime*	*AP Fasteners & Plates* secured at a rate of *18 per 4-ft x 8-ft board*	*UltraPly TPO*	*Membrane Adhesive V*	**-52.5 (Lim. 7)**
						UltraPly TPO FA	*Membrane Adhesive IV*	
						UltraPly TPO FSA	Self-adhered	
						UltraPly TPO SA (HVHZ ONLY)	Self-Adhered	
						UltraPly TPO XR	*XR-S, TJ-R,* or I.S.O. Spray R ribbon adhered 12-inch o.c.; *HA; PermaMop; XR-BA; JBSA* or *TJ-S*	
W-AM-23	*T19/32P, L24*	OPTIONAL *Insulation*	*Preliminarily Secured* or secured with top layer	Min. 0.5-inch *DensDeck Prime*	*AP Fasteners & Plates* secured at a rate of *12 per 4-ft x 8-ft board*	Min. 60 mil UltraPly TPO	*Membrane Adhesive V*	**-52.5 (Lim. 9)**
						UltraPly TPO FA	*Membrane Adhesive IV*	
						UltraPly TPO FSA	Self-adhered	
						UltraPly TPO SA (HVHZ ONLY)	Self-Adhered	
W-AM-24	*T15/32P, L24, N12/6*	OPTIONAL *Insulation*	*Preliminarily Secured* or secured with top layer	Min. 0.5-inch *SECUROCK*	*AP Fasteners & Plates* secured at a rate of *15 per 4-ft x 8-ft board*	*UltraPly TPO* or *UltraPly TPO FA*	*Membrane Adhesive IV*	**-52.5 (Lim. 7)**
						UltraPly TPO FSA	Self-adhered	
						UltraPly TPO SA (HVHZ ONLY)	Self-Adhered	
						UltraPly TPO XR	*XR-BA, PermaMop; HA;* or *TJ-S*	
W-AM-25	*T7/16O, L24, N6/6*	OPTIONAL *Insulation*	*Preliminarily Secured* or secured with top layer	Min. 1-inch *ISO CG*	*AP Fasteners & Plates* secured at a rate of *24 per 4-ft x 8-ft board*	*UltraPly TPO*	*Membrane Adhesive V*	**-52.5 (Lim. 7; Non-HVHZ)**
						UltraPly TPO FA	*Membrane Adhesive IV*	
						UltraPly TPO FSA	Self-adhered	
						UltraPly TPO XR	*XR-S, TJ-R,* ribbon adhered 6-inch o.c. or I.S.O. Spray R ribbon adhered 12-inch o.c.; *JBSA* or *TJ-S*	
W-AM-26	*T7/16O, L24, N6/6*	Min. 1.5-inch *ISO* or *ISO CG*	*AP Fasteners & Plates* secured at a rate of 24 *per 4-ft x 8-ft board*	*SECUROCK, DensDeck Prime,* or *ISO HD*	*Insulation Adhesive VI*	*UltraPly TPO*	*Membrane Adhesive II*	**-52.5 (Lim. 7; Non-HVHZ)**
						UltraPly TPO FA	*Membrane Adhesive I*	
						UltraPly TPO FSA	Self-adhered	

This evaluation report is provided for State of Florida product approval under Rule 61G20-3. The manufacturer shall notify CREEK Technical Services, LLC of any product changes or quality assurance changes throughout the duration for which this report is valid. This evaluation report does not express nor imply warranty, installation, recommended use, or other product attributes that are not specifically addressed herein.

Assemblies with Adhered Membranes over Insulated *Wood Deck* (New, Existing or *Recover*)								
System No.	*Deck Detail*	Base Insulation or Base Sheet	Base Insulation or Base Sheet Attachment	Top Insulation	Top Insulation Attachment	Membrane	Membrane Attachment	*MDP* (psf)
W-AM-27	*T7/16O, L24, N6/6*	Min. 1.5-inch *ISO* or *ISO CG*	*AP Fasteners & Plates* secured at a rate of 24 *per 4-ft x 8-ft board*	*SECUROCK* or *DensDeck Prime*	*Insulation Adhesive VI*	*UltraPly TPO* XR	*XR-BA, PermaMop; HA;* or *TJ-S*	**-52.5 (Lim. 7; Non-HVHZ)**
W-AM-28	*T7/16O, L24, N6/6*	OPTIONAL *Insulation*	*Preliminarily Secured* or secured with top layer	Min. 0.5-inch *SECUROCK*	All-Purpose S Fasteners and Insulation Fastening Plates secured at a rate of *22 per 4-ft x 8-ft board*	*UltraPly TPO XR*	*XR-S, TJ-R,* ribbon adhered 6-inch o.c. or I.S.O. Spray R ribbon adhered 12-inch o.c.; *XR-BA, PermaMop or HA; JBSA* or *TJ-S*	**-52.5 (Lim. 7; Non-HVHZ)**
W-AM-29	*T7/16O, L24, N6/6*	OPTIONAL *Insulation*	*Preliminarily Secured* or secured with top layer	Min. 1.5-inch *ISO HD-C*	All-Purpose S Fasteners and Insulation Fastening Plates secured at a rate of *22 per 4-ft x 8-ft board*	*UltraPly TPO XR*	*XR-S, TJ-R,* ribbon adhered 6-inch o.c. or I.S.O. Spray R ribbon adhered 12-inch o.c.; *JBSA* or *TJ-S*	**-52.5 (Lim. 7; Non-HVHZ)**
W-AM-30	*T7/16O, L24, N6/6*	OPTIONAL *Insulation*	*Preliminarily Secured* or secured with top layer	Min. 0.5-inch *SECUROCK* or Min. 1.5-inch *ISO HD-C*	All-Purpose S Fasteners and Insulation Fastening Plates secured at a rate of *22 per 4-ft x 8-ft board*	*UltraPly TPO*	*Membrane Adhesive V*	**-52.5 (Lim. 7; Non-HVHZ)**
						UltraPly TPO FA	*Membrane Adhesive IV*	
						UltraPly TPO FSA	Self-adhered	
W-AM-31	*T19/32P, L24*	OPTIONAL *Insulation*	*Preliminarily Secured* or secured with top layer	*ISO HD*	*AP Fasteners & Plates* secured at a rate of *15 per 4-ft x 8-ft board*	Min. 60 mil UltraPly TPO	*Membrane Adhesive V*	**-55.0 (Lim. 9)**
						UltraPly TPO FA	*Membrane Adhesive IV*	
						UltraPly TPO FSA	Self-adhered	
						UltraPly TPO SA (HVHZ ONLY)	Self-Adhered	
W-AM-32	*T15/32P, L24, N6/6*	OPTIONAL *Insulation*	*Preliminarily Secured* or secured with top layer	Min. 1.5-inch *ISO CG*	*AP Fasteners & Plates* secured at a rate of *18 per 4-ft x 8-ft board*	*UltraPly TPO*	*Membrane Adhesive V*	**-60 (Lim. 7)**
						UltraPly TPO FA	*Membrane Adhesive IV*	
						UltraPly TPO FSA	Self-adhered	
						UltraPly TPO SA (HVHZ ONLY)	Self-Adhered	
						UltraPly TPO XR	*XR-S, TJ-R,* or I.S.O. Spray R ribbon adhered 12-inch o.c.; *JBSA* or *TJ-S*	

This evaluation report is provided for State of Florida product approval under Rule 61G20-3. The manufacturer shall notify CREEK Technical Services, LLC of any product changes or quality assurance changes throughout the duration for which this report is valid. This evaluation report does not express nor imply warranty, installation, recommended use, or other product attributes that are not specifically addressed herein.

Assemblies with Adhered Membranes over Insulated *Wood Deck* (New, Existing or *Recover*)								
System No.	*Deck Detail*	Base Insulation or Base Sheet	Base Insulation or Base Sheet Attachment	Top Insulation	Top Insulation Attachment	Membrane	Membrane Attachment	*MDP* (psf)
W-AM-33	*T7/16O, L24, N6/6*	OPTIONAL *Insulation*	*Preliminarily Secured* or secured with top layer	Min. 0.5-inch *SECUROCK*	All-Purpose Fasteners and Insulation Fastening Plates secured at a rate of *22 per 4-ft x 8-ft board*	*UltraPly TPO XR*	*XR-S, TJ-R,* ribbon adhered 6-inch o.c. or I.S.O. Spray R ribbon adhered 12-inch o.c.; *XR-BA, PermaMop or HA; JBSA* or *TJ-S*	**-60 (Lim. 7; Non-HVHZ)**
W-AM-34	*T7/16O, L24, N6/6*	OPTIONAL *Insulation*	*Preliminarily Secured* or secured with top layer	Min. 1.5-inch *ISO HD-C*	All-Purpose Fasteners and Insulation Fastening Plates secured at a rate of *22 per 4-ft x 8-ft board*	*UltraPly TPO XR*	*XR-S, TJ-R,* ribbon adhered 6-inch o.c. or I.S.O. Spray R ribbon adhered 12-inch o.c.; *JBSA* or *TJ-S*	**-60 (Lim. 7; Non-HVHZ)**
W-AM-35	*T7/16O, L24, N6/6*	OPTIONAL *Insulation*	*Preliminarily Secured* or secured with top layer	Min. 0.5-inch *SECUROCK* or Min. 1.5-inch *ISO HD-C*	All-Purpose Fasteners and Insulation Fastening Plates secured at a rate of *22 per 4-ft x 8-ft board*	*UltraPly TPO*	*Membrane Adhesive V*	**-60 (Lim. 7; Non-HVHZ)**
						UltraPly TPO FA	*Membrane Adhesive IV*	
						UltraPly TPO FSA	Self-adhered	
W-AM-36	*T15/32P, L24, N6/6*	OPTIONAL *Insulation*	*Preliminarily Secured* or secured with top layer	Min. 0.5-inch *SECUROCK*	*AP Fasteners & Plates* secured at a rate of *18 per 4-ft x 8-ft board*	*UltraPly TPO* or *UltraPly TPO FA*	*Membrane Adhesive IV*	**-67.5 (Lim. 7)**
						UltraPly TPO FSA	Self-adhered	
						UltraPly TPO SA (HVHZ ONLY)	Self-Adhered	
						UltraPly TPO XR	*XR-BA, PermaMop; HA;* or *TJ-S*	
W-AM-37	*T15/32P, L24, N6/6*	OPTIONAL *Insulation*	*Preliminarily Secured* or secured with top layer	Min. 0.5-inch *DenDeck*, min. 2-inch *ISO CG*, min. 1.5-inch *ISO HD-C*	*AP Fasteners & Plates* secured at a rate of 24 *per 4-ft x 8-ft board*	*UltraPly TPO FSA*	Self-adhered	**-75 (Lim. 7)**
						UltraPly TPO SA (HVHZ ONLY)	Self-Adhered	
W-AM-38	*T15/32P, L24, N6/6*	OPTIONAL *Insulation*	*Preliminarily Secured* or secured with top layer	Min. 0.5-inch *DenDeck Prime*	*AP Fasteners & Plates* secured at a rate of 24 *per 4-ft x 8-ft board*	Min. 60 mil UltraPly TPO	*Membrane Adhesive V*	**-75 (Lim. 7)**
						UltraPly TPO FA	*Membrane Adhesive IV*	
						UltraPly TPO FSA	Self-adhered	
						UltraPly TPO XR	*XR-S, TJ-R,* adhered 4-inch o.c.; *XR-BA, PermaMop; HA;* or *TJ-S*	

This evaluation report is provided for State of Florida product approval under Rule 61G20-3. The manufacturer shall notify CREEK Technical Services, LLC of any product changes or quality assurance changes throughout the duration for which this report is valid. This evaluation report does not express nor imply warranty, installation, recommended use, or other product attributes that are not specifically addressed herein.

Assemblies with Adhered Membranes over Insulated *Wood Deck* (New, Existing or *Recover*)								
System No.	*Deck Detail*	Base Insulation or Base Sheet	Base Insulation or Base Sheet Attachment	Top Insulation	Top Insulation Attachment	Membrane	Membrane Attachment	*MDP* (psf)
W-AM-39	*T15/32P, L24, N6/6*	OPTIONAL *Insulation*	*Preliminarily Secured* or secured with top layer	Min. 2-inch *ISO CG*, min. 1.5-inch *ISO HD-C*	*AP Fasteners & Plates* secured at a rate of 24 *per 4-ft x 8-ft board*	Min. 60 mil UltraPly TPO	UltraPly Bonding Adhesive or *JBSA*	**-75 (Lim. 7)**
						UltraPly TPO FSA	Self-adhered	
W-AM-40	*T15/32P, L24, N6/6*	Min. 1.5-inch *ISO* or *ISO CG*	*AP Fasteners & Plates* secured at a rate of 24 *per 4-ft x 8-ft board*	*SECUROCK, DensDeck Prime,* or *ISO HD*	*Insulation Adhesive VI*	*UltraPly TPO*	*Membrane Adhesive V*	**-75 (Lim. 7)**
						UltraPly TPO FA	*Membrane Adhesive IV*	
						UltraPly TPO FSA	Self-adhered	
						UltraPly TPO SA (HVHZ ONLY)	Self-Adhered	
W-AM-41	*T15/32P, L24, N6/6*	Min. 1.5-inch *ISO* or *ISO CG*	*AP Fasteners & Plates* secured at a rate of 24 *per 4-ft x 8-ft board*	*SECUROCK* or *DensDeck Prime*	*Insulation Adhesive VI*	*UltraPly TPO* XR	*XR-BA, PermaMop; HA;* or *TJ-S*	**-75 (Lim. 7)**
W-AM-42	*T15/32P, L24, N6/6*	OPTIONAL *Insulation*	*Preliminarily Secured* or secured with top layer	Min. 0.5-inch *SECUROCK*	*AP Fasteners & Plates* secured at a rate of 24 *per 4-ft x 8-ft board*	*UltraPly TPO*	*Membrane Adhesive V*	**-82.5 (Lim. 7)**
						UltraPly TPO FA	*Membrane Adhesive IV*	
						UltraPly TPO FSA	Self-adhered	
						UltraPly TPO SA (HVHZ ONLY)	Self-Adhered	
						UltraPly TPO XR	*XR-BA, PermaMop; HA;* or *TJ-S*	
W-AM-43	*T15/32P, L24, N6/6*	OPTIONAL *Insulation*	*Preliminarily Secured* or secured with top layer	Min. 0.5-inch *SECUROCK*	All-Purpose S Fasteners and Insulation Fastening Plates secured at a rate of 24 *per 4-ft x 8-ft board*	*UltraPly TPO* or *UltraPly TPO FA*	UltraPly Bonding Adhesive or Single-Ply LVOC Bonding Adhesive 1168	**-90 (Lim. 7)**
						UltraPly TPO FSA	Self-adhered	
						UltraPly TPO SA (HVHZ ONLY)	Self-Adhered	
						UltraPly TPO XR	*XR-BA, PermaMop; HA;* or *TJ-S*	

This evaluation report is provided for State of Florida product approval under Rule 61G20-3. The manufacturer shall notify CREEK Technical Services, LLC of any product changes or quality assurance changes throughout the duration for which this report is valid. This evaluation report does not express nor imply warranty, installation, recommended use, or other product attributes that are not specifically addressed herein.

Mechanically Fastened Assemblies over *Wood Deck* (New or Existing)									
System No.	*Deck Detail*	Thermal Barrier or Vapor Barrier	Base Insulation	Base Insulation Attachment	Top Insulation	Top Insulation Attachment	Membrane	Membrane Attachment	*MDP* (psf)
W-M-1	*T15/32P, L24*	As required	OPTIONAL *Insulation*	*Preliminarily Secured* or secured with top layer	Min. 0.5-inch *Insulation*	*Preliminarily Secured*	*UltraPly TPO*	UltraPly QuickSeam R.M.A Strip attached 8-ft o.c. and secured with All Purpose Fasteners 6-inch o.c. through the Polymer Batten Strip	**-30 (Lim. 7; Non-HVHZ)**
W-M-2	*T7/16O or T15/32P, L24, N6*	As required	OPTIONAL *Insulation*	*Preliminarily Secured* or secured with top layer	Min. 0.25-inch *Insulation*	*Preliminarily Secured*	*UltraPly TPO*	UltraPly QuickSeam R.M.A Strip attached 5-ft o.c. and secured with *HD Fasteners and Plates* 6-inch o.c.	**-30 (Lim. 7; Non-HVHZ)**
W-M-3	*T7/16O or T15/32P, L24, N6/6*	OPTIONAL V-Force Vapor Barrier Membrane	OPTIONAL *Insulation*	*Preliminarily Secured* or secured with top layer	*DensDeck* or *SECUROCK*	*Preliminarily Secured*	*UltraPly TPO* (60-inch wide)	Attached in-lap 6-inch o.c. with *HD Fasteners & Plates*; Fastener rows 54-inch o.c.	**-30 (Lim. 7; Non-HVHZ)**
W-M-4	*T7/16O* or *T15/32P, L24*	As required	OPTIONAL *Insulation*	*Preliminarily Secured*	-	-	*UltraPly TPO*	UltraPly QuickSeam R.M.A Strip attached 4-ft o.c. and secured with All-Purpose Fasteners and HD Seam Plates 12-inch o.c.	**-30 (Lim. 7; Non-HVHZ)**
W-M-5	*T19/32O, L24, N6/6*	As required	OPTIONAL *Insulation*	*Preliminarily Secured*	-	-	Min. 60 mil UltraPly TPO (96-inch wide)	Attached in-lap 9-inch o.c. with *HD Fasteners & Plates*; Fastener rows 90-inch o.c.	**-30 (Lim. 7; Non-HVHZ)**
W-M-6	*T7/16O or T15/32P, L24, N6/6*	As required	OPTIONAL *Insulation*	*Preliminarily Secured* or secured with top layer	*DensDeck* or *SECUROCK*	*Preliminarily Secured*	*UltraPly TPO* (48-inch wide)	Attached in-lap 18-inch o.c. with *HD Fasteners & Plates*; Fastener rows 42-inch o.c.	**-37.5 (Lim. 7; Non-HVHZ)**
W-M-7	*T19/32O, L24, N6/6*	As required	OPTIONAL *Insulation*	*Preliminarily Secured* or secured with top layer	OPTIONAL *Insulation*	*Preliminarily Secured*	Min. 60 mil UltraPly TPO (120-inch wide)	Attached in-lap 6-inch o.c. with *HD Fasteners & Plates*; Fastener rows 114-inch o.c.	**-37.5 (Lim. 7; Non-HVHZ)**
W-M-8	*T7/16O* or *T15/32P, L24,*	As required	OPTIONAL *Insulation*	*Preliminarily Secured*	-	-	*UltraPly TPO*	UltraPly QuickSeam R.M.A Strip attached 4-ft o.c. and secured with All-Purpose Fasteners and HD Seam Plates 6-inch o.c.	**-45 (Lim. 7; Non-HVHZ)**
W-M-9	*T19/32P, L24*	As required	OPTIONAL *Insulation*	*Preliminarily Secured* or secured with top layer	*DensDeck* or *SECUROCK*	*Preliminarily Secured*	*UltraPly TPO* (48-inch wide)	Attached in-lap 12-inch o.c. with *HD Fasteners & Plates*; Fastener rows 42-inch o.c.	**-45 (Lim. 7; Non-HVHZ)**

This evaluation report is provided for State of Florida product approval under Rule 61G20-3. The manufacturer shall notify CREEK Technical Services, LLC of any product changes or quality assurance changes throughout the duration for which this report is valid. This evaluation report does not express nor imply warranty, installation, recommended use, or other product attributes that are not specifically addressed herein.

Mechanically Fastened Assemblies over *Wood Deck* (New or Existing)									
System No.	*Deck Detail*	Thermal Barrier or Vapor Barrier	Base Insulation	Base Insulation Attachment	Top Insulation	Top Insulation Attachment	Membrane	Membrane Attachment	*MDP* (psf)
W-M-10	*T7/16O or T15/32P, L24*	As required	OPTIONAL *Insulation*	*Preliminarily Secured* or secured with top layer	*DensDeck* or *SECUROCK*	*Preliminarily Secured*	*UltraPly TPO* (48-inch wide)	Attached in-lap 6-inch o.c. with *HD Fasteners & Plates*; Fastener rows 42-inch o.c.	**-45 (Lim. 7; Non-HVHZ)**
W-M-11	*T19/32O, L24*	As required	OPTIONAL *Insulation*	*Preliminarily Secured* or secured with top layer	*DensDeck, SECUROCK*	*Preliminarily Secured*	*UltraPly TPO* (48-inch wide)	Attached in-lap 24-inch o.c. with *HD Fasteners & Plates*; Fastener rows 42-inch o.c	**-45 (Lim. 7; Non-HVHZ)**
W-M-12	*T19/32P, L24, N6/6*	As required	OPTIONAL *Insulation*	*Preliminarily Secured* or secured with top layer	*DensDeck* or *SECUROCK*	*Preliminarily Secured*	Min. 60 mil UltraPly TPO (120-inch wide)	Attached in-lap 5-inch o.c. with *HD Fasteners & Plates*; Fastener rows 114-inch o.c.	**-45 (Lim. 7)**
W-M-13	*T19/32O, L24, N6/6*	As required	OPTIONAL *Insulation*	*Preliminarily Secured* or secured with top layer	OPTIONAL *Insulation*	*Preliminarily Secured*	Min. 60 mil UltraPly TPO (120-inch wide)	Attached in-lap 4-inch o.c. with *HD Fasteners & Plates*; Fastener rows 114-inch o.c.	**-45 (Lim. 7; Non-HVHZ)**
W-M-14	*T19/32O, L24, N6/6*	As required	OPTIONAL *Insulation*	*Preliminarily Secured* or secured with top layer	OPTIONAL *Insulation*	*Preliminarily Secured*	Min. 60 mil UltraPly TPO (96-inch wide)	Attached in-lap 5-inch o.c. with *HD Fasteners & Plates*; Fastener rows 90-inch o.c.	**-52.5 (Lim. 7; Non-HVHZ)**

Induction Welded Assemblies over *Wood Deck* (New or Existing)									
System No.	*Deck Detail*	Thermal Barrier	Base Insulation	Base Insulation Attachment	Top Insulation	Top Insulation Attachment	Membrane	Membrane Attachment	*MDP* (psf)
W-W-1	*T15/32P, L24*	As required	OPTIONAL *Insulation*	*Preliminarily Secured* or secured with top layer	*DensDeck* or *SECUROCK*	*InvisiWeld* fastened at a rate of *6 per 4 ft. x 8 ft. board*	*UltraPly TPO*	Induction welded to InvisiWeld plates	**-30 (Lim. 7; Non-HVHZ)**
W-W-2	*T19/32O, L24*	As required	OPTIONAL *Insulation*	*Preliminarily Secured* or secured with top layer	*DensDeck or SECUROCK*	*InvisiWeld* fastened at a rate of *6 per 4 ft. x 8 ft. board*	*UltraPly TPO*	Induction welded to InvisiWeld plates	**-45 (Lim. 7; Non-HVHZ)**

This evaluation report is provided for State of Florida product approval under Rule 61G20-3. The manufacturer shall notify CREEK Technical Services, LLC of any product changes or quality assurance changes throughout the duration for which this report is valid. This evaluation report does not express nor imply warranty, installation, recommended use, or other product attributes that are not specifically addressed herein.

Induction Welded Assemblies over *Wood Deck* (New or Existing)									
System No.	*Deck Detail*	Thermal Barrier	Base Insulation	Base Insulation Attachment	Top Insulation	Top Insulation Attachment	Membrane	Membrane Attachment	*MDP* (psf)
W-W-3	*T7/16O* or *T15/32P, L24*	As required	OPTIONAL *Insulation*	*Preliminarily Secured* or secured with top layer	*DensDeck* or *SECUROCK*	*Preliminarily Secured*	*UltraPly TPO*	*Invisiweld* secured 24-inch o.c. through deck into wood rafters/trusses in rows spaced 48-inch o.c.; Membrane welded to InvisiWeld plates	**-45 (Lim. 7; Non-HVHZ)**
W-W-4	*T15/32P, L24*	As required	OPTIONAL *Insulation*	*Preliminarily Secured* or secured with top layer	*DensDeck* or *SECUROCK*	*InvisiWeld* fastened at a rate of *8 per 4 ft. x 8 ft. board*	*UltraPly TPO*	Induction welded to InvisiWeld plates	**-52.5 (Lim. 7)**
W-W-5	*T19/32P, L24, N6/6*	As required	OPTIONAL *Insulation*	*Preliminarily Secured* or secured with top layer	*DensDeck* or *SECUROCK*	*InvisiWeld* fastened at a rate of *12 per 4 ft. x 8 ft. board*	*UltraPly TPO*	Induction welded to InvisiWeld plates	**-52.5 (Lim. 7)**
W-W-6	*T15/32P, L24, N6/6*	As required	OPTIONAL *Insulation*	*Preliminarily Secured* or secured with top layer	Min. 1-inch *ISO, ISOGF,* or *ISO HD-C*; *DensDeck* or *SECUROCK*	*InvisiWeld* fastened at a rate of *16 per 4 ft. x 8 ft. board*	*UltraPly TPO*	Induction welded to InvisiWeld plates	**-67.5 (Lim. 7; Non-HVHZ)**
W-W-7	*T7/16O* or *T15/32P, L24, N6/6*	As required	OPTIONAL *Insulation*	*Preliminarily Secured* or secured with top layer	*DensDeck*	*Preliminarily Secured*	*UltraPly TPO*	*Invisiweld* secured 6-inch o.c. through deck into wood rafters/trusses in rows spaced 96-inch o.c.;; Membrane Induction welded to InvisiWeld plates	**-75 (Lim. 7)**

END OF REPORT

This evaluation report is provided for State of Florida product approval under Rule 61G20-3. The manufacturer shall notify CREEK Technical Services, LLC of any product changes or quality assurance changes throughout the duration for which this report is valid. This evaluation report does not express nor imply warranty, installation, recommended use, or other product attributes that are not specifically addressed herein.